E-CHAPTER

Key Concepts

RIC MERRIFIELD

re-think

A BUSINESS MANIFESTO FOR CUTTING COSTS AND BOOSTING INNOVATION

what do you need to do today?

(Key Concepts—Rethink)

Key Concepts

Ric Merrifield

Ric Merrifield spent nearly 15 years in various consulting roles helping organizations define and achieve their goals. Since joining Microsoft, Merrifield has spent more than 10,000 hours as a business architect and has filed twelve patent applications all with the goal of helping companies rethink their operating models and get out of the "how" trap described in the pages of this book.

Merrifield recently coauthored "The Next Revolution in Productivity," a June 2008 *Harvard Business Review* article focused on case studies that highlight needs of the organization and the opportunity to rethink business operating models before making major technology changes. Merrifield is an alumnus of Lakeside School in Seattle and Georgetown University in Washington, D.C.

Publishing as FT Press
Upper Saddle River, New Jersey 07458

ISBN-10: 0137031564
ISBN-13: 9780137031566

Previous methods for business improvement largely have been about optimization and improvement, and many of them have been very successful in helping people achieve dramatic improvements. However, there hasn't been a lens that not only enables, but encourages people to rethink not just their own work, but their entire operating model in their business ecosystem. That is why we have turned our focus to looking at "what" the work is before asking "how" it should be performed. This Key Concepts section is a useful quick reference to the basic ideas in this book to help you in your rethinking journey.

CONVENTIONAL "HOW" BUSINESS VIEWS

For much of the past century, people have looked at organizations through one of two lenses: a people view (the organization chart) or a financial view (spreadsheets, reports, profit and loss tables, and so forth). These are "how" views of the organization, in terms of "how" they currently are structured and organized, and "how" funds are budgeted and spent. Although these are valid tools and remain vital, they are often used in a way that limits the view of the person to the inside of the four walls of the organization. In today's increasingly complex ecosystems of customer and partner relationships, those inward-facing views are insufficient. These views are rarely a good place to start when rethinking.

Process views can often traverse the artificial boundaries that are sometimes implied or created with the workflow view. Figure 1 is a good example of a common workflow process map. Process maps are a valuable way to capture the specific steps of how the work is performed, and they can also be useful for describing past or future state work flow. There are no real rules for creating a process map (which is an asset in the flexibility it provides, as well as a risk in the sense that it can be difficult to know if the map is complete and accurate), and they are typically a collection of iconic shapes, lines, and arrows. The following "how" map is for a

Create-Insurance-Quote "what" discussed in Chapter 1, "How the 'How' Trap Is Trapping You."

Think of Create-Insurance-Quote as a three dimensional box. As long as the outcome of achieving that "what" is accomplished, "how" the work is done in terms of steps of work, the people doing the work, the technology, and so forth can be done any number of ways. Figure 1 is just one way of representing the work flow. The number of steps can change, the shapes and labels can change in terms of "how" the work is done, but the label of the "what" is still Create-Insurance-quote, and that's the key distinction in the book—there is a relationship between what the work is and how it is performed. However, you can change "how" it is done, without changing "what" is being done (you could outsource it, to use a very simple example).

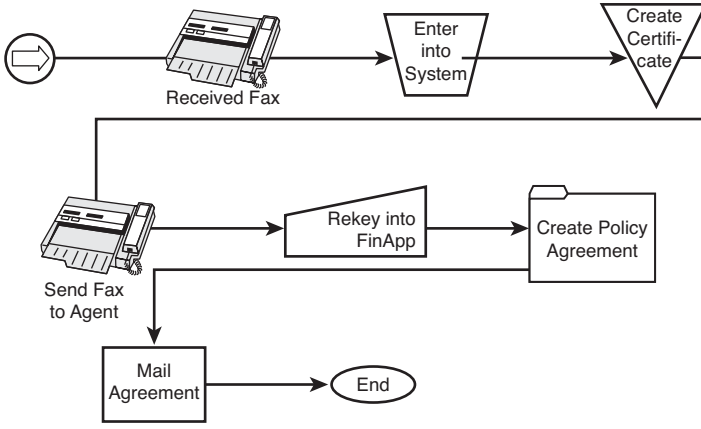

Figure 1: Common workflow process map

When talking to people about their work requirements, a process map is commonly presented as the current state of the work (although past and future state maps are also common). If people often assume that the map reflects the current state and all or most of the current requirements are being met, then it is very easy to fall into a "how" trap here and assume that this is a good starting point for requirements analysis in this instance. Starting with a "how" view, and then describing a different "how" view is very difficult. It is much easier to look at the "how," then understand the "what" it is connected to. Once that "what" is understood, the discussion of whether this is the best "how" or which parts of the "how" to change becomes much simpler.

There are a number of things worth pointing out in this representative process map in Figure 1:

- **Where does the arrow at the top left part of the page come from?** Clearly that is the start of the process, but what causes it to start? Where does it sit relative to other processes? What is the parent process? Are there other child processes? All of these things are attributes that can be captured in a disciplined way and attached to the "what."

- **Is the "Send Fax" step a requirement or not?** More than likely the requirement is to **Communicate-Status**, as that is really "what" is being done, and the fax machine is more "how" it is currently being done. Now that's not to say that it couldn't be required either through some regulation or customer contract that a fax machine has to be used—while it is unlikely, it's not clear from the process map. This is a very good example of where talking with a subject matter expert can blur the line between what is truly required and what is simply a matter of how the work is being done today. Classic "how" trap.
- **Who is the "customer" of this work?** Someone is clearly benefitting from this work—an insurance customer and/or the insurance agent preparing the quote. What performance expectations have been set? Should this take five minutes, a day, or a week? Do they expect it to be free? What level of quality do they expect? How close to the final price must it be? Does the insurance quote created here need to comply with some specific regulation? These are important questions that are not explicitly captured in the map, which are also attributes to associate with the "what."

- **Is some of this work already outsourced?** The box labeled "Mail Agreement" is something that could easily be performed by a third-party fulfillment house, as that is very common. While there's nothing wrong with that, if someone wants to make a change to people, or process, or the supporting technology, they may not be able to; and if they are able to, there may be a very different set of security, technology, and other requirements that are not obvious from this process map.
- **What is the value of this work to the department, the division, or the organization as a whole? Is this a core function or a commodity function?** Maybe creating insurance quotes are the one reason their customers do business with them, and maybe it's generic across the industry and no one really pays any attention to it (like the airport check-in example discussed in Chapter 1). If someone in the information technology department is talking about adding some software to automate this work, and they don't know it's a primary source of differentiation, there's a great deal of risk there—just as if someone were looking to improve the process workflow and it

is a commodity function. (Like airport check-in, as a commodity function, no one should care who does it, or what the process or what technology supports it, as long as the correct outcome is achieved). This is covered in greater length in Chapter 3, "First—Identify the 'Whats' That Are Truly Valuable."

- **How is it currently performing?** Chapter 4, "Second—Know What You Are (and Aren't) Good At," talks about value and performance as two of the key places to start rethinking. This amounts to assigning explicit performance expectations to work, and ensuring that there is some link—at least assertion based, if not proven—to indicate whether the work is a direct cause of the good or bad performance of the organization as a whole.

WHAT IS, AND IS NOT, A "WHAT"

A great example of why managers should appreciate the importance of understanding the "whats" of the work separated from their "hows" is the basic employee performance evaluation. Managers need to set specific outcome targets for each employee, and in most cases the manager shouldn't care "how"

they go about it as long as it's legal and within budgetary constraints. Unfortunately, most employee targets are tied to a set of goals (like a scorecard) that are connected to a "how" view of people, or process, which makes it very difficult to assert and test the real value/performance drivers discussed in Chapters 3 and 4. As a consequence, there's a risk that organizations are not focusing their cost cutting, or innovation, or customer satisfaction, or what-have-you initiatives on the right things. My work has shown that this is almost always the case to some degree.

At this point I will take a slightly more grammatical perspective in pointing out that a key difference between a "what" and "how" lies in the verbs used to name them. Notice in the following list that the "whats" have verbs that are outcome verbs. In the first one, what you are doing is acquiring customers, and the example "how" to the right is using the telephone. There are many other "hows" that can be used to acquire customers, whether it's going to a trade show or e-mailing a list of prospective customers that was purchased from a third party. The point is, define the "what" outcome that you need to be doing, and then get into the conversation of "how" to do it.

What	How
Acquire-New-Customers	Phone prospects
Deliver-Product	Truck product to customer
Create-Purchase-Order	Complete order form document
Generate-Invoices	Run invoicing reporting program
Pay-Employee	Transmit funds to third-party payroll company

READING A HEAT MAP

Heat maps are a very powerful way of representing "whats" and their relationships to one another. Adding color or "heat" helps inform conversations about the "whats" that are most in need of attention. The colors added to the heat maps reflect the scores linked to responses to questions I ask people at all levels in an organization about performance, value, predictability, connectedness, compliance, and others. The following is a quick review on those terms:

1. Business Value (Chapter 3)
   - How strongly does it connect to the performance of a key performance indicator of the organization?
   - Is it part of the brand or identity relative to why customers, partners, or employees work with you?
   - How useful or valuable would it be to invest in improving the performance?
2. Performance (Chapter 4)
   - How is it currently performing today?
   - Do we know and understand what causes performance today?
   - Do we know and understand what it would take to improve performance?
3. Connectedness (Chapter 5)
   - How standalone is the work versus heavily interconnected to other work?
   - Is some or all of the work outsourced (do we control it)?
   - Does the "what" interact with organizations across the "corporate" boundary?

4. Predictability/Maturity (Chapter 6)
   - How predictable is the outcome/output of the work?
   - How finite, common, and known are the things that cause the outcome/output to vary?
   - How much do we control the inputs to the work?
5. Compliance (Chapter 7)
   This one is a little unusual because you will often want to ask these questions for each regulation and policy whether you are looking for all regulations/policies that touch a single area of work, or you are looking at a single regulation/policy that touches multiple areas of work.
   - What is the regulation (law) or policy (internal) that is linked to this work?
   - How many regulations or policies are linked to this work?
   - If known, is the work in compliance with the regulations or policies?

The book provides some guidance about how to score the answers to these questions, and I typically score with equal weighting to each question and try to keep the answers to Yes/No and High, Medium, and Low.

Figure 2 shows a parent "what" that consists of five child "whats" with various combinations of performance and business value ratings. (Note: This is a simplistic heat map example. Because the book is printed in black & white, you cannot see the colors. For more examples, which are in color, please go to www.rethinkbook.com.) Something that's quite common in interviewing individuals is that they have a very specific set of ideas about what is the most important thing that should be done to improve things. However, when the discussion lacks the discipline and rigor of objectively defined work such as "whats," it can be hard to know if that person's suggestion makes the most sense.

For example, **Prepare-Quote** is a "what" child in the **Develop-Opportunity** example in Figure 2. If someone said that automating the **Prepare-Quote** "what" is the most important thing to do, with this diagram you now have some information to respond to that person. Because the **Develop-Opportunity** "what" is high value and performing poorly, it makes sense to talk about improving its performance. Then the conversation should be, do we know or have assertions about which of the child capabilities cause the parent to perform the way it does. The **Assess-Customer-Needs** "what" is high value but it's already performing well, so that might not be the first place to look to improve the performance of the parent and continue the conversation from there. Based on this information, however, the

Prepare-Quote "what" is performing Medium and it's also Medium business value. So just looking at business value and performance, we would have to gather some additional information to justify a conclusion to proceed with a discussion about investing time, money, or energy in that particular "what." The accomplishment here is that instead of simply arguing opinions about whether **Prepare-Quote** is a "what" that needs to be automated (which is a "how" decision), you are able to have a more objective discussion and say that there needs to be a more compelling business case for doing anything to **Prepare-Quote**, rather than having any conversation about whether the right "how" change is to automate it.

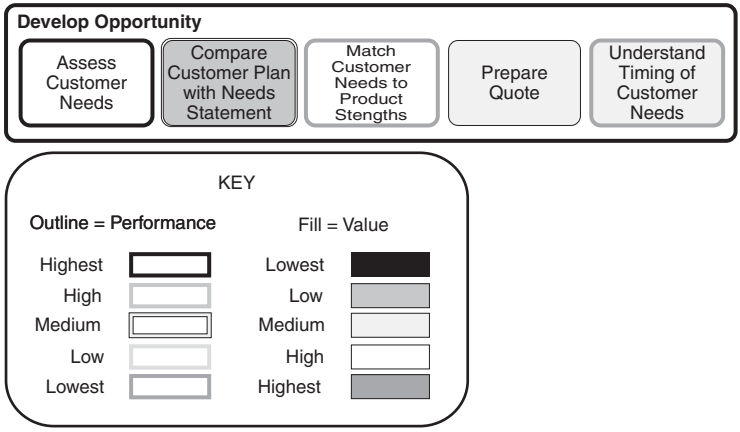

Figure 2: Develop opportunity heat map

GETTING TO THE LIST OF "WHATS"

The list of "whats" isn't simply a list. The list reflects relationships that are described as levels, where a Level 1 map, or list, is made up of the highest level "whats" that make up an organization. Each "what" in Level 1 is made up of several more specific "whats" that are the Level 2 "whats," and Level 2 is then made up of the Level 3 "whats" and so on, often going down five to seven levels deep. People often ask what the "right" depth is, and my experience has been that it first depends on the following:

- What questions are you asking in terms of what opportunities you are looking to address, or which problems you are looking to solve? Some issues are higher level issues than others, so in some cases there is no value in going several levels deep.
- Who are you talking to? If you are talking with someone in the shipping dock, that's a pretty specific set of "whats," and it's likely that the person doing that work will be talking about "whats" that may be at levels, four, five, and six. By contrast, if you are talking to a senior executive, she won't be talking at the same level of detail as the person in the shipping dock, so in those cases, it's likely that Levels 1-4 are likely places for the conversation to focus.

- Apart from any specific instructions you get from a manual or book, you need to let value guide you in decisions like this. If you are talking with the shipping dock about a "what" such as **Confirm-Shipment-Complete**, depending on the purpose of your efforts, that may be too detailed, or it may not be detailed enough. The more you do this work, the better you will become at making these decisions.

Figure 3 is a common representation of a Level 1 map, where the inside shapes, numbered 1-5 are the "whats" that make up the business—these labels will vary somewhat across industries, but not much. Government organizations, schools, health-care organizations, and some particularly unusual industries such as Oil and Gas—because of what they call "upstream" and downstream"—will also make Level 1 look different. In the retail industry, they don't really develop products and services, so that "what" #1 would be planning and procurement for the items that they sell. A key point is that there isn't a canonical list of "whats." If people want to organize their "whats" differently, that's okay—the "whats" are by definition defined objectively, and placement of the "whats" is a decision you can make.

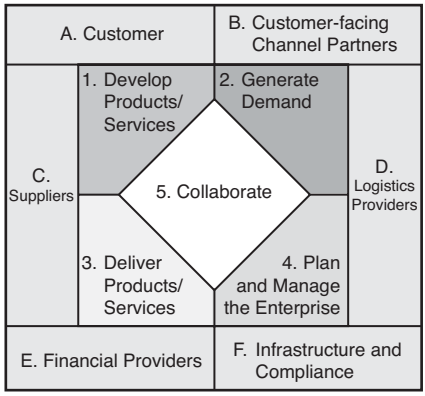

Figure 3: Level 1 map

On the outside of this particular Level 1 map, you will see items lettered A-F, which are the outside organizations that the business needs to interact with. A key point to make here is that the "whats" that make up the business are relatively stable and durable. A company might outsource all of its **Deliver-Products** "what" to UPS, like Toshiba did in Chapter 1. Even though another company is doing that "what," it's still part of the business. We talked about this with the Newman's Own company—even though there are a tiny number of employees in the company, it's still part of a very large business that includes several other companies that they outsource to. So the business is stable and durable, and it's up to each company to decide which of the "whats" in the business they want to perform.

A BIT MORE ABOUT LEVEL 1 MAPS

It is very common for an organization to be made up of several businesses, as represented in Figure 4. Some automotive companies have a different division for each different label, while other companies have divisions that do very different things. Nokia is a company that makes automotive tires and cellular phones. In those larger enterprises, there is an overall umbrella parent company, but each division should be viewed as its own business. One of the things very common in these businesses in the enterprise is that they come up with very specialized terms and labels for how they do their work. Because these businesses often don't communicate much with one another, it is almost as though they are speaking different languages. One of the big benefits of the "what" lens is that it helps to cut through these foreign languages and helps expose when the same "whats" exist. This opens the door to discussions about best-practice "hows" that can be used, or even whether it makes sense for each division to be doing the same "whats" in specific cases. The Zip code example in Chapter 1 is a vivid illustration of how much money can be saved very quickly using this approach.

An Enterprise Is a Legal Entity That Can Be Made Up of Many Separate Businesses

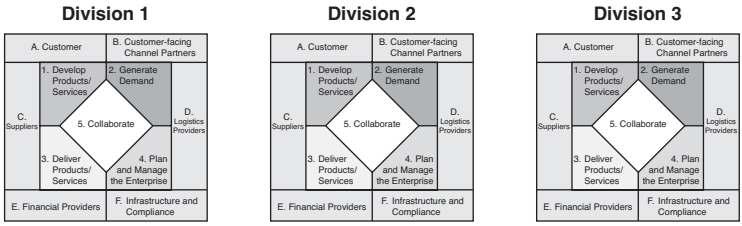

When looking at how capability maps are implemented, in terms of people, IT, processes, it becomes evident where:

1. **The same capability is being performed by the same people**
2. **The same capability is not being implemented the same way**

Figure 4: An organization made up of several businesses

LEVEL 2 MAPS

As I mentioned before, the "whats" in Level 2 are the "whats" that are inside of each Level 1 "what," the so-called children of each Level 1 parent. So, if you see below in the Level 1 "what" called **Generate-Demand**, the children of **Generate-Demand**, are the Level 2 "whats" that are **Manage-Partner-Relationships**, **Market-Products**, and **Sell-Products**.

When you get into Level 2, the first parent/child relationships emerge. Numbering the "whats" makes it easier to refer to individual "whats," and the numbering helps to reinforce the notion of the parent/child hierarchy. Again, there is no right or wrong way

to organize these relationships. Some people would have ten Level 2 "whats" in the **Generate-Demand** "what" whereas others would prefer to see that level of detail in Level 2.

1.0 Create-Products/Services

- 1.1 Develop-New-Product/Service-Concepts-and-Plans
- 1.2 Design-New-Product/Service-and-Processes
- 1.3 Develop-New-Products/Services
- 1.4 Launch-Products/services
- 1.5 Manage-Existing-Products/Services-(Manage-Product/Service-Lifecycle)
- 1.6 Withdraw-Existing-Product/Service

2.0 Generate-Demand

- 2.1 Manage-Partner-Relationships
- 2.2 Market-Products/Services
- 2.3 Sell-Products/Services

3.0 Deliver-Products

- 3.1 Plan-Long-Term-Fulfillment
- 3.2 Procure-Raw-Materials
- 3.3 Produce-Product

3.4 Deliver-Services

3.5 Ship-Product

3.6 Maintain-Business-Intelligence

4.0 Plan-and-Manage-the-Business

4.1 Complete-Strategic-Planning

4.2 Manage-Capital

4.3 Manage-Culture-and-Corporate-Values

4.4 Manage-Finances

4.5 Manage-Projects

4.6 Manage-Human-Resources

4.7 Manage-Compliance-and-Risk

4.8 Manage-IT-Services

5.0 Manage-Collaboration

5.1 Manage-Strategy

5.2 Manage-Cross-Group-Planning

5.3 Manage-Operations

This is Level 2, and although it is tempting to show Level 3, the template list expands to more than 200 in Level 3, and then more than 1,000 at Level 4. So instead of just listing them here, that information is available at www.rethinkbook.com.

Hopefully you will be able to make good use of this Key Concepts section in your rethinking endeavors.

OTHER *RETHINK* ELECTRONIC CHAPTERS AVAILABLE

If you enjoyed this chapter, check out the other chapters available:

Introduction
ISBN 0137031785 / 9780137031788

(Chapter 1) How the "How" Trap Is Trapping You
ISBN 0137031793 / 9780137031795

(Chapter 2) The Thinking Behind Rethinking
ISBN 0137031807 / 9780137031801

(Chapter 3) Identify the "Whats" That Are Truly Valuable
ISBN 0137031815 / 9780137031818

(Chapter 4) Know What You Are (and Aren't) Good At
ISBN 0137031823 / 9780137031825

(Chapter 5) Make (and Break) Connections
ISBN 0137031831 / 9780137031832

(Chapter 6) Understand What Can (and Can't) Be Predicted
ISBN 0137031505 / 9780137031504

(Chapter 7) Unravel (and Follow) the Rules
ISBN 0137031513 / 9780137031511

(Chapter 8) Revolutionary Rethinking at ING DIRECT
ISBN 0137031521 / 9780137031528

(Chapter 9) Rethinking at Eclipse
ISBN 013703153X / 9780137031535

(Chapter 10) Rethinking at Cranium
ISBN 0137031548 / 9780137031542

(Chapter 11) Morph Again and Again
ISBN 0137031556 / 9780137031559

Key Concepts
ISBN 0137031564 / 9780137031566

Index
ISBN 0137031572 / 9780137031573