CHAPTER 2

BASIC CABLE TV BACKGROUND: MODULATION SIGNAL FORMATS AND COAXIAL CABLE SYSTEMS

As we learned in chapter 1, HFC networks have evolved from traditionally broadcasting only multichannel analog video signals to a two-way mixture of analog and digital signals carrying both digital video and high-speed data. This chapter provides the basic technical background of cable TV systems carrying analog and digital video signals. Section 2.1 will explain the most commonly used analog video modulation formats, while Section 2.2 will discuss the different digital video and audio signal standards. The primary cable TV frequency plans that are used in the U.S. are reviewed in Section 2.3. In Section 2.4, the basic characteristics of multichannel coaxial systems are reviewed in terms of the properties of their components such as coaxial cables, taps, and RF amplifiers. The different degradation mechanisms over multichannel coaxial cable plants such as second- and third-order nonlinear distortions, multipath micro-reflections or echoes, group delay, and AM hum modulation are reviewed in Section 2.5. The last section will discuss the sources of upstream noise, including ingress noise, and their impact on the return-path transmission over cable TV networks.

2.1 Analog Modulated Video Signal Formats

2.1.1 NTSC and AM-VSB Video Signals

The National Television Systems Committee (NTSC) initiated the basic monochrome TV standard in the U.S. in 1941 by broadcasting 525 interlaced lines at 60 fields per second, which was designated as system M by the Commite′ Consulatif International Radiocommunications (CCIR). In 1953, the NTSC of the Electronic Industries Association (EIA) established color TV standards, which are now in use for terrestrial broadcasting and cable TV transmission systems in North America, Japan, and many other countries. This color TV system was designed to be compatible with the monochrome (black and white) TV systems that existed previously [1]. The specifications of a composite NTSC video signal, as described by NTSC, include a 525-line interlaced scan at horizontal frequency of 15,734.26

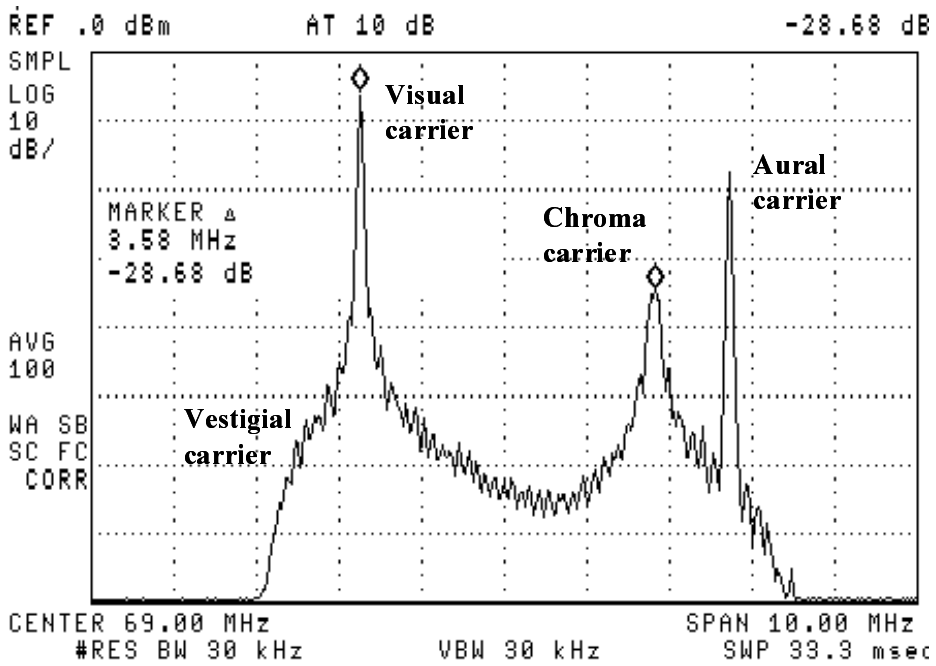

Figure 2.1 Measured frequency spectrum of NTSC video signal at channel 4, showing the luma, chroma, and aural carriers.

Hz; 15,750 Hz for monochrome TV, and a vertical scan frequency of 59.94 Hz (60 Hz for monochrome TV).

A complete video image as seen on a TV monitor is called a frame, which consists of two interlaced vertical fields with 262.5 lines each. The TV image is scanned at a vertical frequency of 59.94 Hz such that the lines of field 2 are interlaced with the lines of field 1 to create the desired 525 lines frame at a repetition rate of 29.97 Hz. Historically, the 60-Hz vertical scan frequency was selected for monochrome TV sets to match the 60-Hz power line rate such that any power-related distortions would appear stationary. For color TV, both the horizontal and vertical scan frequencies have been slightly reduced from the monochrome display case to allow for the interference beat between the chrominance carrier and the aural carrier to be synchronized to the video signal. Figure 2.1 shows the modulated RF spectrum of an NTSC video signal based on AM-VSB format at an RF visual carrier frequency of 67.25 MHz (channel 4). The brightness portion of the video signal, which contains all the information of the picture details, is commonly called the luminance or visual carrier. The color portion of the video signal, which contains information about the picture hue (or tint) and color saturation, is commonly called chrominance or *chroma* carrier. The

chroma carrier is located 3.579545 MHz above the luma carrier. The hue information, which is contained in the phase angle of the 3.58-MHz chroma carrier, allows one to distinguish between the different colors such as red (R), green (G), blue (B), etc. Notice that white, gray, and black are not hues. Color saturation indicates the amount of white light dilution of the hue, and often is expressed in percentages. Thus, 100%-saturated color is a pure hue, which is undiluted by white light. The saturation information is carried by the amplitude magnitude of the chroma carrier. Since the human eye response varies from one hue to another, different amplitudes for different colors are required for 100% color saturation. For more details on the 1931 Commission Internationale de l'Eclairage (CIE) colorimetric standard, the reader is encouraged to look at these references [1–3].

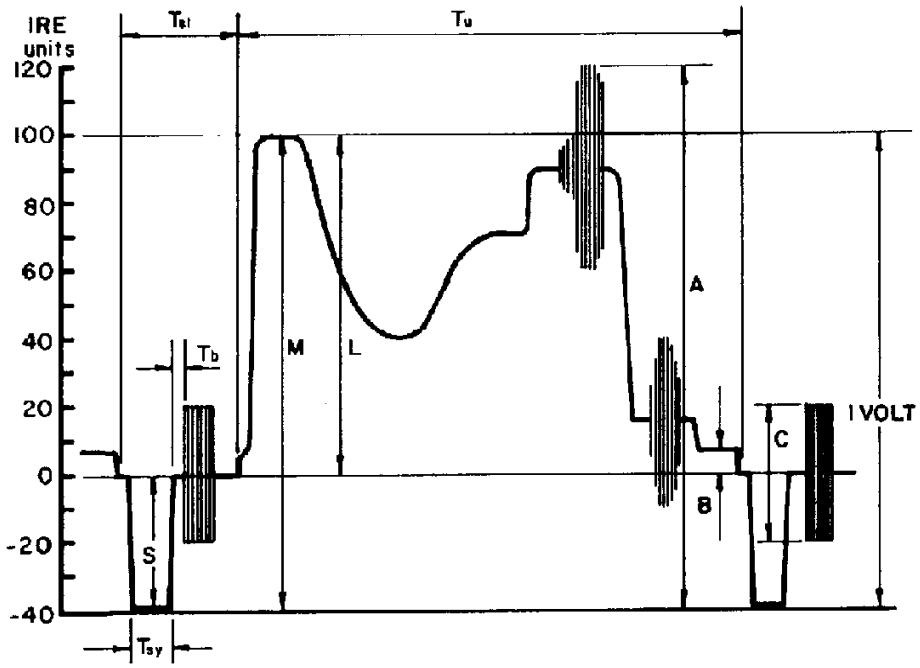

Figure 2.2 Time domain waveform of standard NTSC composite color video signal, showing its components as follows: (A) the peak-to-peak amplitude of the composite color video signal, (B) the difference between the black level and blanking level, (C) the peak-to-peak amplitude of the color burst, (L) nominal value of luminance signal, (M) peak-to-peak amplitude of monochrome video signal, (S) amplitude of synchronizing signal; T_b, duration of breezeway, T_{sl}, duration of line blanking period, T_{sy}, duration of synchronizing pulse, T_u, duration of active line period. After Ref. [2].

It is well known that the human eye is more sensitive to the color green than blue. Thus, the white color or visual carrier can be constructed from the three primary colors, namely R, G, and B, each with different weighting normalized to 1.0 as follows:

$$Y = 0.3R + 0.59G + 0.11B = 1.0 \tag{2.1}$$

Using this relationship, the color information of any point can be coded into two chosen color difference signals: ($R - Y = V$) and ($B - Y = U$). The NTSC system employs quadrature amplitude modulation (QAM) of the 3.58-MHz chroma carrier to convey the color difference information of the composite chroma signal. This method of color broadcast provides a compatible signal that can be reproduced on black-and-white as well as color TV sets.

Figure 2.1 also shows the aural (sound) carrier, which is located 4.5 MHz above the visual carrier with frequency deviation of ±25 kHz for monaural audio. The analog sound carrier is frequency modulated (FM), and in HFC networks must be maintained between 10 dB to 17 dB below the visual carrier amplitude according to Federal Communications Commission (FCC) requirements [4]. Notice the 0.75-MHz lower sideband from the luma carrier, which is typically called the vestigial sideband. This is the portion of the lower sideband of the composite video signal that remained as a tradeoff between minimizing the NTSC signal bandwidth and preserving picture details as much as possible.

To gain further understanding about NTSC signals, let us examine the time-domain waveform of standard NTSC composite video as shown in Figure 2.2 [2]. The standard NTSC composite video signal is specified to be 1-volt peak-to-peak (p-p) from the tip of the horizontal synchronization pulse to 100% white, and is divided into 140 equal parts called IRE units. The horizontal blanking pedestal, which is the 0 IRE reference level, starts as the sweeping electron beam of the picture tube reaches slightly over the extreme right-hand side edge of the screen. This prevents illumination of the TV screen during retrace, namely, until the electron beam deflection circuits are reset to the left edge of the TV screen and ready to start another line scan. In a typical TV set, the blanking level is "blacker than black" to assure no illumination during retrace. This difference, which is 7.5 IRE units, is shown as (B) in Figure 2.2. The tip of the horizontal synchronization pulse, which is abbreviated as the sync pulse, is at –40 IRE, and about 0.3 volt (p-p). Thus, the various gray levels of the luma carriers are divided between +7.5 IRE units and +100 IRE units (100% white).

During the vertical blanking interval, the first 21 lines are not displayed as the TV set prepares to receive a new field. This is commonly called the vertical blanking interval (VBI). The FCC requires that broadcasting TV stations include special vertical interval test signals (VITS) in each TV field [5]. The VITS are typically inserted between lines 10 and 21 to allow in-service testing of the TV broadcasting equipment. The FCC composite and the NTC-7[1] test signals have the necessary video signal components to perform the FCC re-

[1] NTC report number 7 (1976) was prepared by the Network Transmission Committee of the Video Transmission Engineering Advisory Committee, a joint committee of television network broadcasters and the Bell system.

quired tests for NTSC signals. Figure 2.3 shows, for example, the FCC composite test signal, which consists of a line bar, a 2T pulse, a chroma pulse, and a modulated five-riser staircase signal. The primary difference between these two test signals is the test sequence in which the video signal components are presented.

The relationship between the amplitude of the composite video signal and the percentage of amplitude modulation of the RF carrier is also unique. TV transmission uses a negative modulation such that the sync pulse produces the maximum RF peak-to-peak amplitude modulated envelope of the composite signal, while the white portion of the signal (+100 IRE units) produces the RF minimum amplitude of the modulated envelope. Negative modulation means that brightest portion of the composite video signal is represented by the minimum RF power. The depth of AM modulation of the composite video signal is specified to vary between 82.5 and 90% with a nominal value of 87.5%. The depth of modulation is less than 100% in order to allow the sound carrier to be recovered for even during the brightest portion of the composite video signal. This relationship between the amplitude and depth of modulation is advantageous, in order to minimize the visual effect of noise interference, which typically shows up as "snow" in the picture, at the weakest portion of the signal.

Figure 2.2 also shows four main time intervals in the composite video signal waveform. The horizontal blanking pedestal consists of the front porch, which lasts 1.47 μs, the -40 IRE sync pulse (T_{sy}) with duration of 4.89 μs, and a 4.4 μs back porch at the blanking level. During the back porch period, color is being generated in 8 to 10 cycles of 3.58 color burst at a specific reference phase for all the TV display lines.

2.1.2 NTSC Signal Test Parameters

There are various parameters, which are often quoted in the literature or in product specifications, to measure the quality of an NTSC video signal after its transmission. In this section a short overview of the most important test parameters of NTSC video signal is provided. The main NTSC video signal test parameters are

- Signal-to-(weighted)-noise-ratio (SNR)
- Differential gain (DG)
- Differential phase (DP)
- Chrominance-to-luminance delay inequality (CLDI)

The NTC-7 SNR is the ratio of the peak luma carrier level, 714 mV or 100 IRE, to the weighted rms noise level contained in 4-MHz bandwidth. The peak luma carrier level must be measured across a terminating impedance of 75 ohms. The weighted noise is used to compensate for the visual responses of the human eye, namely, different viewers perceive greater picture degradation at some frequencies more than other frequencies. A special luma weighted filter (NTC-7) per CCIR Recommendation 567 is primarily used in the U.S. The carrier-to-noise-ratio (CNR) is approximately equal to the SNR (within 0.5 dB) for

AM-VSB video signals. The CNR measurement on the spectrum analyzer is done with 30-kHz resolution bandwidth (RB), 100-Hz or 300-Hz video bandwidth (VB), and in automatic sweep mode.

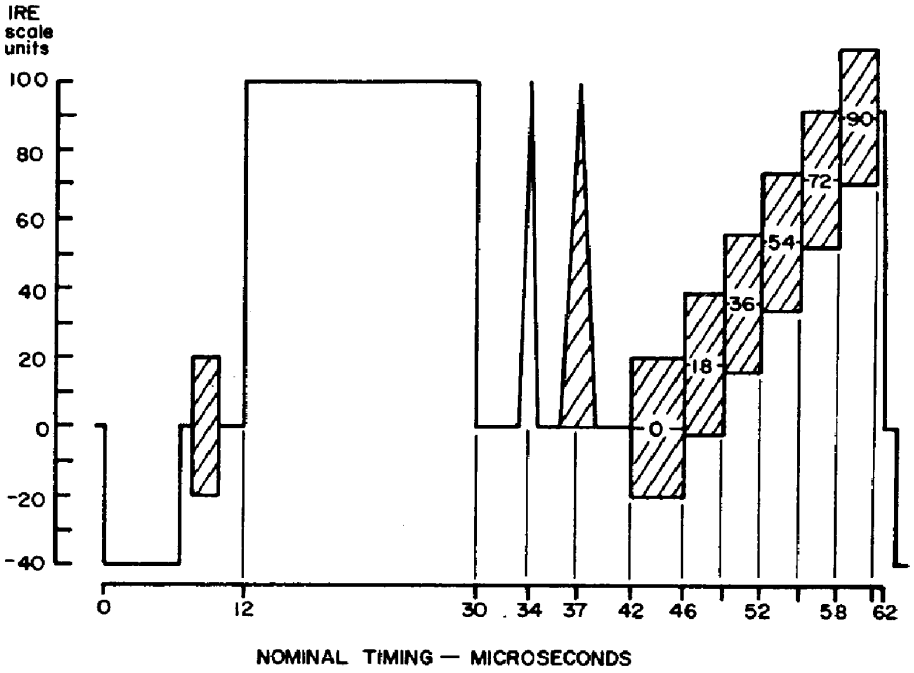

Figure 2.3 FCC Composite test signal within one horizontal scan period. After Ref. [2].

There are several noise correction factors that are best explained through an example. Suppose one measures an uncorrected CNR of 63 dB. Then, the corrected CNR is calculated as follows: CNR = 63 dB – (21.25 + 2.5 – 0.52 –2.2) = 41.97 dB, where the 21.25 dB is the conversion factor from a RB of 30 kHz to 4 MHz, and the 2.5 dB is log detect Rayleigh noise correction factor for the spectrum analyzer. Since most spectrum analyzers have a Gaussian shaped video filter, the measured 3-dB noise bandwidth is larger than an ideal rectangular filter. Thus, the corrected noise needs to be reduced by about 0.52 dB. In addition, the 2.2 dB is the spectrum analyzer noise floor correction factor, assuming the noise floor drops only 4 dB when disconnecting the coaxial cable from the spectrum analyzer. According to the FCC Section 76.605, the measured video signal at the input to the subscriber's terminal is required to have a CNR equal to or greater than 43 dB.

The differential gain (DG) is the change in amplitude of the chroma signals (measured at 3.58 MHz) as the luminance level changes. It is measured as the difference in amplitude

between the largest and smallest component of the chroma signal, divided by the largest component and expressed in % or dB of the largest component. There are two types of modulated staircase signals, namely, the previously mentioned FCC composite test and NTC-7. The NTC-7 tests are intended for baseband video measurements. The FCC composite test signal should be used when using a video test generator. However, the generator is not needed if the channel to be tested already contains the FCC VITS. In the FCC Section 76.605, the DG is required not to exceed 20% for the received NTSC signal at the subscriber's terminal.

The differential phase (DP) is the change in the phase of the chroma signal as the amplitude of the luma signal changes. The same test signals to measured DG should be used to measure DP. According to FCC Section 76.605, the DP for the color carrier is measured as the largest phase difference in degrees between each chroma component and a reference component (the component at the blanking level of 0 IRE) should not exceed ±10 degrees.

The chrominance-to-luminance delay inequality (CLDI) is the change in time delay of the chroma signal relative to the luminance signal of an NTSC video signal as measured at the output of a modulator or processing unit at the cable headend. According to the FCC Section 76.605, the CLDI shall be within 170 ns. This test is typically done inserting the VITS signal before it is received at the cable TV headend.

2.1.3 PAL and SECAM Video Signals

Two other color TV standards, which are mostly used in various countries outside of North America, are the phase alternation line (PAL) standard and the sequentiel couleur avec memoire (SECAM) standard. There are different variations of the PAL standard, which are mostly used in European countries and are designated by different letters such as PAL "I" (United Kingdom), PAL "B", PAL "G", PAL "H" (continental Europe), and PAL "M" (Brazil) [1].

Like the NTSC system, the PAL system employs QAM modulation of the chroma carrier to convey the color-difference information as a single composite chroma signal. The $(R-Y)$ color-difference carrier is phase inverted (180°) on alternate lines to improve the picture performance for different impairment conditions. For example, suppose that for a red hue, the $(R-Y)$ color component in the NTSC signal has a phase of +90°. In a PAL signal, one line is identical to the NTSC signal, but on the next line, the phase of this $(R-Y)$ component is switched to +270°, returning to +90° on the following line, etc. This phase-alternation line of the $(R-Y)$ component gives the PAL system its name. The color burst signal, which is used by the NTSC system during the horizontal synchronization time interval, is eliminated in the PAL system because of the alternating phase of line by line. The "simple" PAL system relies upon the human eye to average the line-by-line color switching process. Thus, the picture on a PAL TV can be degraded by 50-Hz line beats caused by system nonlinearities introducing visible luminance changes at the line rate. To solve this problem, an accurate and stable delay element was used to store the chroma signal for one complete line period in what is sometimes called PAL-deluxe (PAL-D).

Similar to the NTSC system, the PAL system has an equal bandwidth (1.3 MHz at 3 dB) for the two color-difference components, namely *U* and *V*. There are small variations of the PAL system among different countries, particularly where 7-MHz and 8-MHz channel bandwidths are used. Table 2.1 summarizes the key technical specifications for both NTSC and PAL video signals.

Table 2.1 Basic technical specifications for NTSC and PAL video signals

Parameter/Format	NTSC	PAL
Number of lines per picture	525	625
Field (vertical Scan Frequency	59.94 Hz	50 Hz
Horizontal Scan Frequency	15,734.26 Hz	15,625 Hz
Channel Bandwidth (MHz)	6	6 System "N" 7 System "B" 8 System "I"
Nominal Video Bandwidth (MHz)	4.2	4.2 System "N" 5 Systems "B", "G", "H" 6 Systems "D", "K", "L"
Color Subcarrier relative to the vision carrier (MHz)	3.579545	4.433618 Systems "I", "B", "G", "H" 3.575611 System "M"
Sound Sub-carrier relative to vision carrier (MHz)	4.5	4.5 System "N" 5.5 Systems "B", "G", "H" 5.9996 System "I"
Sound Modulation	FM	FM
Vestigial Sideband (MHz)	0.75	0.75 Systems "B", "G", "N" 1.25 Systems "H", "I", "L"
Gamma	2.2	2.8

The PAL system "I", which has an 8-MHz channel bandwidth, has added a new digital sound carrier, which is called *near-instantaneous companding audio multiplex* (NICAM). The NICAM carrier is located 6.552 MHz above the visual carrier (exactly nine times the bit-rate), and is differentially QPSK modulated at a bit rate of 728 kb/s and it is 20 dB below the visual carrier peak-sync power. Since the new sound carrier is located close to the analog FM sound carrier as well as the adjacent channel luminance carrier, the digital sound signal is scrambled before it is being modulated.

The SECAM system, which was adopted by France and the USSR in 1967, has several common features with the NTSC system such as the same luminance carrier given by equation 2.1 and the same color-difference U and V components. But this approach is considerably different from both the NTSC and PAL systems in the way the color information is being modulated onto the composite chroma carrier. First, the color-difference components are transmitted alternately in time sequence from one successive line to the next with the same visual carrier for every line. Since there is odd numbers of lines in a frame, any given line carries the $(R-Y)$ component on one field and the $(B-Y)$ component on the next field. Second, the color information in the $(R-Y)$ and $(B-Y)$ components is carried using FM. Similar to the PAL-D receiver, an accurate and stable delay element is used in synchronization with the switching process to have a simultaneous existence of the $(B-Y)$ and the $(R-Y)$ signals in a linear matrix to form the $(G-Y)$ color-difference component. In addition, the bandwidth of the chroma components U and V is reduced to 1-MHz. It should also be noted that the SECAM system employs AM modulation of the sound carrier as opposed to the FM modulation that is used in both NTSC and PAL systems.

2.2 Digital Video and Audio Signals

Digital coding of NTSC composite signals typically requires a raw bit rate of about 115 Mb/s, assuming analog-to-digital conversion of 8-bit and 4 times sampling of the chroma carrier. Obviously, this is a very high transmission rate to stuff in a 6-MHz channel bandwidth. To overcome this limitation, a standard for digital video (sequences of images in time) and audio compression has been developed by the MPEG (moving pictures experts group) committee under ISO (the international standards organization) [6-9]. The MPEG technology includes different patents from many companies and individuals around the world. However, the MPEG committee only deals with the technical standards and does not address the intellectual property issues. Related standards for still image compression are called joint photographic experts group (JPEG) and joint bilevel image experts Group (JBIG), which is used for binary image compression such as faxes. Other non-MPEG standards for video/audio are discussed in Section 2.2.3.

2.2.1 MPEG-1 Standard

A picture element or pixel is formed by Y, U, V sample values. Thus, if all the three components (Y, U, V) use the same sampling grid, each pixel has three samples (see Section 2.2.2). The first result of the MPEG committee was called MPEG-1. MPEG-1 compression starts with a relatively low-resolution video sequence of about 352 by 240 pixels by 29.97 frames/s (US), but with the original compact disk (CD) quality audio. The video compression method relies on the human eye's inability to resolve high frequency color changes in a picture. Thus, the color images are converted to the YUV-space, and the two-chroma components (U and V) are decimated further to 176 by 120 pixels. The 352x240x29.97 rate is

derived from the CCIR-601 digital television standard, which is used by professional digital video equipment. 720 by 243 by 59.94 fields per second are used, where the fields are interlaced when displayed. Note that fields are actually acquired and displayed at a 1/59.94 second apart. The chroma components are 360 by 243 by 59.94 fields a second interlaced. This 2:1 horizontal chroma decimation is called 4:2:2 sampling. The source input format for MPEG-1, called SIF, is CCIR-601 decimated by 2:1 in the horizontal direction, 2:1 in the time direction, and an additional 2:1 in the chroma vertical direction. For PAL and SECAM video standards where the display frequency is 50-Hz, the number of lines in a field is increased from 243 or 240 to 288, and the display rate is reduced to 50 fields/s or 25 frames/s. Similarly, the number of lines in the decimated chroma components is increased from 120 to 144. Since 288.50 = 240.60, the two formats have the same source data rate. Section 2.2.2 has additional discussion on the chroma subsampling for MPEG-2 video.

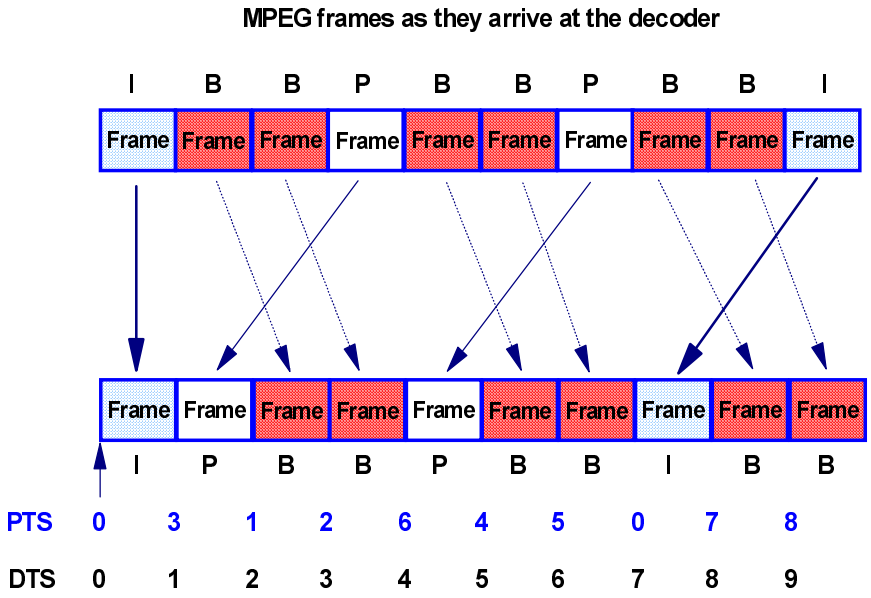

Figure 2.4 PES frames as they arrive at the decoder and as they are displayed, showing the corresponding PTS and DTS.

Macroblock is the basic building block of an MPEG picture. It consists of 16x16-luminance sample together with one 8x8 block of samples for the two-color components. The basic method is to predict image motion from frame to frame, and then to use the discrete cosine transform (DCT) to organize the redundancy in the spatial directions. The

DCTs are done on 8x8 pixel blocks, and the motion predictions are done on the luminance signals (*Y*) in 16x16 pixel blocks.

The second step of the encoding process is called *entropy coding*. The task of the entropy encoder is to transmit a particular stream of symbols in as few bits as possible. The technique for making optimal integer code assignments is called Huffman coding, which is used to code the result of the DCT coefficients, the motion vectors, and the quantization parameters with fixed tables. The DCT coefficients have a special Huffman table that is two-dimensional in that one code specifies a run-length of zeros and the nonzero value that ended the run. Another statistical coding model that is used to code the motion vectors and the frequency-independent DCT components is called differential pulse code modulation (DPCM). Here, the difference between each picture-element (pel) and a prediction is calculated from neighboring pel values already transmitted. Pel differences are considerably less correlated than the original pel values, and can be coded independently with reasonable efficiency.

There are three types of coded frames. Intra (I) frames are simply frames coded as still images, not using any past history, while predicted (P) frames are predicted from the most recently reconstructed I or P frames. Each macro-block in a P frame either comes with a vector and DCT coefficients for the closest match in the last I or P frame, or can be intra-coded (as with the I frames) if there was no good match. Bidirectional (B) frames are predicted from the closest two I or P frames, one in the past and one in the future. Thus, one is trying to search for the matching blocks in those frames, and see which one works best. In other words, given the 16x16 block in the current frame that one is trying to code, what is the closest match to that block in a previous or future frame? Beside the picture data, the video encoder attaches header information for each group of B, P, and I frames, known as group of pictures (GOP) to form the elementary video stream. A packetized elementary stream (PES) is formed by attaching additional header information such as program clock reference (PCR), optional encryption, packet priority levels, etc. to the elementary stream. The encoder or the MPEG multiplexer provides each PES with the so-called presentation time stamp (PTS) and decode time stamp (DTS). The DTS tells the decoder when to decode each frame, while the PTS tells the decoder when to display each frame. Before the PES is ready to be transmitted, a transport stream (TS) is formed. The packet structure for the MPEG-TS will be discussed in the next section on MPEG-2.

Figure 2.4 shows the ordering of B, P, and I frames for decoding with the corresponding PTS and DTS. The sequence of decoded frames usually goes like **I**BBPBBPBBPBB**I**BBPBBPB…, where there are 12 frames from one I frame to the next (U.S. and Japan only). This is based on a random access requirement that you need a starting point at least once every 0.4 seconds or so. The ratio of P frames to B frames may vary from one encoder to another. For the decoder to work, one would have to send that first P frame before the first two B frames, so the compressed data stream ends up looking like the example in Figure 2.4. One has to decode the I frame, then decode the P frame, keep both of those in memory, and then decode the two B frames. The I frame is probably displayed while the P frame is decoded, and the B-frames are displayed while they are decoded, and

then the P frame is displayed as the next P frame is decoded, and so on. Since bidirectional macroblock predictions are an average of two macroblocks blocks, noise is reduced at low bit rates.

Table 2.2 shows the typical P-, B-, and I-frame size (in kbits) for both MPEG-1 and MPEG-2 video signals. At nominal MPEG-1 video (352x240x30, 1.15 Mbit/sec) rates, it is said that B frames improve SNR by as much as 2 dB. However, at higher bit rates, B frames become less useful since they inherently do not contribute to the progressive refinement of an image sequence (i.e., not used as prediction by subsequent coded frames).

Table 2.2 Typical frame sizes (in kilobits) for MPEG-1 and MPEG-2 compressions.

Compression Method	I frame	P frame	B frame	Average
MPEG-1 SIF @ 1.15 Mb/s	150 kb	50 kb	20 kb	38 kb
MPEG-2 @ 4.0 Mb/s	400 kb	200 kb	80 kb	200 kb

The MPEG-1 coding was originally designed only for progressive frames display (e.g., computer monitors). In order to display the MPEG-1 syntax on an analog TV set, the video frames need to be interlaced. There are two methods that can be applied to interlaced video that maintain syntactic compatibility with MPEG-1. In the field concatenation method, the encoder model can carefully construct predictions, and prediction errors that realize good compression while maintaining field integrity (distinction between adjacent fields of opposite parity). Some preprocessing techniques also can be applied to the interlaced source video that would lessen the sharp vertical frequencies. This technique is not efficient, of course. On the other hand, if the original source was progressive (e.g., film), then it is relatively more trivial to convert the interlaced source to a progressive format before encoding. Reconstructed frames are reinterlaced in the decoder display process.

An essential element in the utilization of MPEG intercompression is called motion compensation. Motion compensation is used to minimize the effect of image movement from a reference picture to the predicted picture. Motion vectors are described in terms of horizontal and vertical image displacements. The key technical issues in using motion vectors are the precision of the motion vectors, the size of the image region assigned to a single motion vector, and the selection criteria for the best motion vector values. There are various techniques that are used to estimate the motion vectors such as mean absolute distortion (MAD) and mean square error (MSE).

One of the main misconceptions about MPEG-1 is that it has fixed or limited frame size (i.e., 352x240x29.97 frame/s or 352x288x25 frame/s). In fact, MPEG-1 can use any frame size, including CCIR-601 resolutions (704x480), with frame sizes as high as 4095x4095x60 frame/s. MPEG-2 is more limited since frame sizes must be multiples of 16.

Another misunderstood issue arises from the standard profile and is known as constrained parameters bit stream (CPB). The CPB is a series of restrictions that the MPEG-1 stream must meet, including bit rate and frame sizes. Most hardware decoders accept only streams that follow the CPB profile. One can encode with any bit rate or frame size and still have standard MPEG-1. However, this encoded MPEG-1 stream cannot be decoded and displayed with some of the existing decoder chips.

CPB is a limited set of sampling and bit-rate parameters designed to normalize computational complexity, buffer size, and memory bandwidth while still addressing the widest possible range of applications. CPB limits video images to 396 macroblocks (101,376 pixels) per frame if the frame rate is less than or equal to 25 frames/s, and 330 macroblocks (84,480 pixels) per frame if the frame rate is less or equal to 30 frames/s. Therefore, MPEG-1 video is typically coded at SIF dimensions (352x240x30 frames/s or 352x288x25 frames/s). The total maximum sampling rate is 3.8 Msamples/s including chroma. The coded video rate is limited to 1.862 Mbit/sec. In industrial practice, the bit-rate is the most often waived parameter of CPB, with rates as high as 6 Mbit/s in use.

Historically, CPB was an optimum point that barely allowed cost effective VLSI implementations using 0.8 μm technology. It also implied a nominal guarantee of interoperability for decoders and encoders. MPEG decoders, which were not capable of meeting SIF rates, were not considered to be true MPEG decoders. Currently, there are several ways of getting around CPB for SIF class applications and decoder. Thus, one should remember that CPB limits frames to 396 macroblocks (as in 352x288 SIF frames). Still within the constraints are sampling rates of 416x240x24 Hz, but this only aids NTSC (240 lines/field) displays. Deviating from 352 samples/line could throw off many decoder implementations that have limited horizontal sampling-rate conversion modes. From a practical perspective, many decoders are simply doubling the sampling rate from 352 to 704 samples/line via binary taps, which are simple shift-and-add operations. Future MPEG decoders will have arbitrary sample rate converters on-chip.

2.2.2 MPEG-2 Standard

The MPEG-2 standard for compressing both video and audio signals is similar to MPEG-1, and it is targeted toward more diverse applications such as all-digital transmission of broadcast TV, digital media storage, high-definition TV (HDTV), etc. The most significant enhancement over MPEG-1 is the addition of syntax for efficient coding of interlaced video signals, such as those that originated from electronic cameras. Several other more subtle enhancements (e.g., 10-bit DCT DC precision, nonlinear quantization, VLC tables, and improved-mismatch control) are included, which have a noticeable improvement on coding efficiency, even for progressive video. Other key features of MPEG-2 are scalable extensions, which permit the division of a continuous video signal into two or more coded bit streams, representing the video at different resolutions, picture quality (i.e., SNR), or picture rates. The MPEG-2 standard defines 4:2:0, 4:2:2, and 4:4:4 chroma sampling formats relative to the luminance. Figure 2.5 illustrates the difference between 4:2:0 and 4:2:0 sampling

formats. In 4:2:0 sampling, the chroma samples from two adjacent lines in a field are interpolated to produce a single chroma sample, which is spatially located half way between one of the original samples and the location of the same line but opposite field. The 4:2:0 sampling has many drawbacks, including significantly inferior vertical chroma resolution compared with a standard composite NTSC signal. In 4:2:2 sampling, the chroma is subsampled 2:1 horizontally but not vertically, with the chroma alignment with the luminance as shown in Figure 2.5. The 4:4:4 sampling has the same sampling to both chroma components, and the luminance with the same decomposition into interlaced fields, resulting in high-quality video images. MPEG-2 defines five different profiles as follows: simple profile (SP), main profile (MP), SNR scalable profile, spatially scalable profile, and high profile. The most

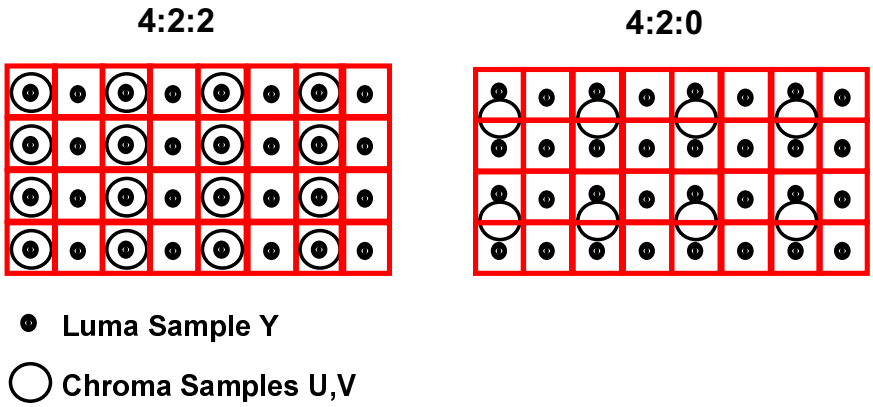

Figure 2.5 The 4:2:2 and 4:2:0 chroma components (U, V) sub-sampling relative to the luminance sample (Y).

Table 2.3 MPEG-2 level bounds for the main profile.

MPEG Parameter	MP at HL	MP at H-14	MP at ML	MP at LL
Samples/line	1920	1440	720	352
Lines/frame	1152	1152	576	352
Frame/sec	60	60	30	30
Luma Rate (samples/s)	62,668,800	47,001,600	10,368,000	3,041,280
Bit Rate (Mb/s)	80	60	15	4
VBV Buffer size (bits)	9,781,248	7,340,032	1,835,008	475,136

useful profile is the MP, which consists of four levels: main level (ML), high-1440 level (H-14), main level (ML), and low level (LL). Table 2.3 provides the level bounds for the main profile.

The video buffering verifier (VBV), which is an idealized model of the MPEG-2 decoder, is used to constrain the instantaneous bit rate of the MPEG-2 encoder such that the average bit rate target is met without overflowing the decoder data buffer. All the bounds in Table 2.3 are upper bounds except for the VBV buffer size, which is a lower bound.

The use of B frames increases the computational complexity, bandwidth, delay, and picture buffer size of the encoded MPEG video since some of the macroblock modes require averaging between two macroblocks. At the worst case, memory bandwidth is increased an extra 16 MB/s (601 rate) for this extra prediction. An extra picture buffer is needed to store the future prediction reference. In addition, extra delay is introduced in the encoding process, since the frame used for backwards prediction needs to be transmitted to the decoder before the intermediate B-pictures can be decoded and displayed. Since the extra picture buffer pushes the decoder DRAM memory requirements past the magic 1-Mbyte threshold, several companies such as AT&T and General Instrument argued against the use of the B-frames. In 1991, General Instrument introduced DigiCipher I video coding, which is similar to MPEG-2 coding but uses smaller macroblock predictions with no B frames and with Dolby AC-1 audio. In 1994, General Instrument introduced the DigiCipher II specification, which supports both the full MPEG-2 video main profile syntax and DigiCipher II with the use of the Dolby AC-3 audio algorithm [7].

The transmission of MPEG 2 compressed video streams through HFC access networks using QAM modulators to the digital STB at the subscriber's home will be discussed in detail in Chapter 8.

2.2.3 MPEG and AC-3 Audio

The MPEG compression of audio signals, which is based on MUSICAM technology, is done using high-performance perceptual schemes [10]. These schemes specify a family of three audio coding schemes called layer-1 (MP1), layer-2 (MP2), and layer-3 (MP3) with increasing complexity and performance. Since the uncompressed digital stereo music in CD quality is about 1.5 Mb/s, one can achieve 4:1 compression or 384-kb/s for stereo signals using MP1, while still maintaining the original sound quality. Compression of 8:1 to 6:1 (192 to 256 kb/s) the stereo signals can be achieved with MP2, while MP3 provides 12:1 to 10:1 compression (112 kb/s to 128 kb/s) with essentially no loss in discernible quality. The audio coding scheme can be describes as “perceptual subband transform coding.” The audio coding scheme makes use of the masking properties of the human ear to reduce the amount of data. The various “spectral” components of the audio signal are analyzed by calculating a modified DCT (MDCT) and applying a psychoacoustic model to estimate the audible noise threshold. The noise caused by the quantization process is distributed to various frequency bands in such a way that it is masked by the total signal, that is, it remains inaudible.

Another perceptual coding technology, which has been adopted by the advanced television systems committee (ATSC) as the standard audio for HDTV in the United States, is called AC-3 and was developed by Dolby Laboratories [11]. AC-3 technology can support up to eight channel configurations, ranging from mono to six discrete audio channels (left, center, right, left surround, right surround, and subwoofer). As mentioned before, DigiCipher II uses the Dolby Labs AC-3 compression algorithm for the audio source. The AC-3 encoder can support data rates ranging from 32-kb/s up to 640-kb/s at sample rates of 32 kHz, 44.1 kHz, and 48 kHz. For further details, see reference [12].

2.2.4 MPEG-4 Standard

Unlike MPEG-1/2, where the scope and technology were well defined when the project started, MPEG-4 was born to answer the emerging needs of various new applications ranging from interactive audiovisual services to remote monitoring and control [13]. Thus, the MPEG-4 goal is to provide a flexible and extensible standard for the convergence of interactive multimedia applications, which currently are not addressed by the existing standards.

To enable the content-based interactive functionality, the MPEG-4 video standard introduces the concept of video object planes (VOPs). It is assumed that each frame of an input video sequence is segmented into a number of arbitrarily shaped image regions (e.g., VOPs), where each of the regions may possibly cover particular image or video content of interest (i.e., describing physical objects or content within scenes). In contrast to the video source format used for MPEG-1 and MPEG-2, the video input to be coded by the MPEG-4 verification model is no longer considered a rectangular region. The input to be coded can be a VOP image region of arbitrary shape, and the shape and location of the region can vary from frame to frame. Successive VOPs belonging to the same physical object in a scene are referred to as video objects (VOs), that is, a sequence of VOPs of possibly arbitrary shape and position. The shape, motion, and texture information of the VOPs belonging to the same VO is encoded and transmitted or coded into a separate video object layer (VOL). In addition, the bit stream must include the relevant information to identify each of the VOLs, and how the various VOLs are composed at the receiver in order to reconstruct the entire original sequence. This allows the separate decoding of each VOP and the required flexible manipulation of the video sequence. Notice that the video source input assumed for the VOL structure either already exists in terms of separate entities (i.e., is generated with chroma-key technology) or is generated by means of on-line or off-line segmentation algorithms.

It is expected that MPEG-4 video coding will eventually support all the functionalities already provided by MPEG-1 and MPEG-2, including the provision to efficiently compress standard rectangular sized image sequences at varying levels of input formats, frame rates and bit rates. In addition, content-based functionality will be assisted.

2.2.5 Other Digital Video Standards

There are several non-MPEG video standards such as ITU-T Recommendation H.261 [14] and H.263 [15], which actually were developed before the MPEG standard. The first digital video standard was developed for visual applications by the CCITT group XV for integrated services digital network (ISDN) services, operating at px64 kb/s for p = 1,..,30. The H.261 standard has many elements in common with MPEG-1. The image dimensions were restricted to two sizes, common intermediate format (CIF) with 360x288 (Y) and 180x144 (*U* and *V*), and quarter CIF (QCIF). The H.261 syntax consists of four layers as follows: (A) picture layer, which has a picture header followed by 3 or 12 group of blocks (GOBs) with each GOB consisting of 33 macroblocks and a header, (B) GOBs layer, (C) macroblock layer, and (D) block layer, which is similar to the block layer of MPEG-1. The macroblock header provides information about the position of the macroblock relative to the position of the just coded macroblock. To simplify the compression standard, macroblocks between frames can be skipped if the motion-compensated prediction is sufficiently good.

Another similar non-MPEG video teleconferencing standard is H.263, which is based on H.261 standard for low bit-rate applications. The H.263 standard has four optional modes that enhance its functionality, including unrestricted motion vector mode and arithmetic coding mode instead of variable length codes, advanced prediction mode, and coding P and B frames as one unit.

2.3 Cable TV Frequency Plans

The frequency plan of cable TV channels in the U.S. is specified by the FCC. FCC rules in Part 76 specify frequencies to in accordance with the channel allocation plan set forth by with the Electronics Industry Association (EIA) [16]. The nominal channel spacing is 6-MHz, except for the 4-MHz frequency gap between channels 4 and 5. Table 2.4 shows the standard (STD), incrementally related carrier (IRC), and harmonically related carrier (HRC) cable TV frequency plans in the U.S.

In the STD cable TV frequency plan, which is similar to the frequency plan of terrestrially broadcasted TV channels, all the visual carriers except channels 5 and 6 are located 1.25 MHz above the lower edge of the channel boundary in 6-MHz multiples (1.25 + 6*N*) MHz. The visual carriers for channels 5 and 6 are located 0.75 MHz below the 6-MHz multiples. Notice that the visual carrier in the following channel groups 14–15, 25–41, and 43–53 have a 12.5-kHz frequency offset relative to the rest of the channels.

In the IRC frequency plan, all the visual carriers except for channels 42, 60, and 61 are located 1.2625 MHz above the lower edge of the channel boundary in 6-MHz multiples (1.2625 + 6*N*) MHz. Thus, the visual carrier in the IRC frequency plan has 12.5-kHz frequency offset compared with the STD frequency plan. This frequency offset was selected to

minimize interference in the 25-kHz radio channels, which are used for communications by airport control towers and aircraft navigation equipment based on FCC rulings.[2]

In the HRC frequency plan, all the visual carriers except for channels 60 and 61 are located essentially at the lower channel boundary in 6.0003-MHz multiples. As with the IRC plan, the 300-Hz incremental band increase was selected to minimize the interference in the 25-kHz radio channels used for aviation. The cable TV channel numbers are often designated according to electronic industry association (EIA) [16]. As we will see in Section 2.4,

Table 2.4 Standard, HRC, and IRC cable TV frequency plans in the US. After Ref. [16].

Channel Designation	Visual Carrier Frequency (MHz)		
EIA	**STD**	**HRC**	**IRC**
T7*	7.0000		
T8*	13.0000		
T9*	19.0000		
T10*	25.0000		
T11*	31.0000		
T12*	37.0000		
T13*	43.0000		
2	55.2500	54.0027	55.2625
3	61.2500	60.0030	61.2625
4	67. 2500	66.0033	67.2625
5	77. 2500	N/A	
6	83. 2500	N/A	
5	N/A	78.0039	79.2625
6	N/A	84.0042	85.2625
7	175. 2500	174.0087	175.2625
8	181. 2500	180.0090	181.2625
9	187. 2500	186.0093	187.2625
10	193. 2500	192.0096	193.2625
11	199. 2500	198.0099	199.2625
12	205. 2500	204.0102	205.2625
13	211. 2500	210.0105	211.2625
14	121. 2625	120.0060	121.2625
15	127. 2625	126.0063	127.2625
16	133. 2625	132.0066	133.2625
17	139. 2500	138.0069	139.2625
18	145. 2500	144.0072	145.2625

[2] See for example Code of Federal Regulations part 87.421 about the aviation channels and FCC rulings.
* Based on a conventional plan, which was originated in about 1960.

19	151. 2500	150.0075	151.2625
20	157. 2500	156.0078	157.2625
21	163. 2500	162.0081	163.2625
22	169. 2500	168.0084	169.2625
23	217. 2500	216.0108	217.2625
24	223. 2500	222.0111	223.2625
25	229. 2500	228.0114	229.2625
26	235.2625	234.0117	235.2625
27	241.2625	240.0120	241.2625
28	247.2625	246.0123	247.2625
29	253.2625	252.0126	253.2625
30	259. 2625	258.0129	259.2625
31	265. 2625	264.0132	265.2625
32	271. 2625	270.0135	271.2625
33	277. 2625	276.0138	277.2625
34	283. 2625	282.0141	283.2625
35	289. 2625	288.0144	289.2625
36	295. 2625	294.0147	295.2625
37	301. 2625	300.0150	301.2625
38	307. 2625	306.0153	307.2625
39	313. 2625	312.0156	313.2625
40	319. 2625	318.0159	319.2625
41	325. 2625	324.0162	325.2625
42	331. 2750	330.0165	331.2750
43	337. 2625	336.0168	337.2625
44	343. 2625	342.0171	343.2625
45	349. 2625	348.0174	349.2625
46	355. 2625	354.0177	355.2625
47	361. 2625	360.0180	361.2625
48	367. 2625	366.0183	367.2625
49	373. 2625	372.0186	373.2625
50	379. 2625	378.0189	379.2625
51	385. 2625	384.0192	385.2625
52	391. 2625	390.0195	391.2625
53	397. 2625	396.0198	397.2625
54	403.2500	402.0201	403.2625
55	409.2500	408.0204	409.2625
56	415.2500	414.0207	415.2625
57	421.2500	420.0210	421.2625
58	427.2500	426.0213	427.2625

59	433.2500	432.0216	433.2625
60	439.2500	438.0219	439.2625
61	445.2500	444.0222	445.2625
62	451.2500	450.0225	451.2625
63	457.2500	456.0228	457.2625
64	463.2500	462.0231	463.2625
65	469.2500	468.0234	469.2625
66	475.2500	474.0237	475.2625
67	481.2500	480.0240	481.2625
68	487.2500	486.0243	487.2625
69	493.2500	492.0246	493.2625
70	499.2500	498.0249	499.2625
71	505.2500	504.0252	505.2625
72	511.2500	510.0255	511.2625
73	517.2500	516.0258	517.2625
74	523.2500	522.0261	523.2625
75	529.2500	528.0264	529.2625
76	535.2500	534.0267	535.2625
77	541.2500	540.0270	541.2625
78	547.2500	546.0273	547.2625
79	553.2500	552.0276	553.2625
80	559.2500	558.0279	559.2625
81	565.2500	564.0282	565.2625
82	571.2500	570.0285	571.2625
83	577.2500	576.0288	577.2625
84	583.2500	582.0291	583.2625
85	589.2500	588.0294	589.2625
86	595.2500	594.0297	595.2625
87	601.2500	600.0300	601.2625
88	607.2500	606.0303	607.2625
89	613.2500	612.0306	613.2625
90	619.2500	618.0309	619.2625
91	625.2500	624.0312	625.2625
92	631.2500	630.0315	631.2625
93	637.2500	636.0318	637.2625
94	643.2500	642.0321	643.2625
95	91.2500	90.0045	91.2625
96	97.2500	96.0048	97.2625
97	103.2500	102.0051	103.2625
98	109.2750	108.0250	109.2750

99	115.2750	114.0250	115.2750
100	649.2500	648.0324	649.2625
101	655.2500	654.0327	655.2625
102	661.2500	660.0330	661.2625
103	667.2500	666.0333	667.2625
104	673.2500	672.0336	673.2625
105	679.2500	678.0339	679.2625
106	685.2500	684.0342	685.2625
107	691.2500	690.0345	691.2625
108	697.2500	696.0348	697.2625
109	703.2500	702.0351	703.2625
110	709.2500	708.0354	709.2625
111	715.2500	714.0357	715.2625
112	721.2500	720.0360	721.2625
113	727.2500	726.0363	727.2625
114	733.2500	732.0366	733.2625
115	739.2500	738.0369	739.2625
116	745.2500	744.0372	745.2625
117	751.2500	750.0375	751.2625
118	757.2500	756.0378	757.2625
119	763.2500	762.0381	763.2625
120	769.2500	768.0384	769.2625
121	775.2500	774.0387	775.2625
122	781.2500	780.0390	781.2625
123	787.2500	786.0393	787.2625
124	793.2500	792.0396	793.2625
125	799.2500	798.0399	799.2625
126	805.2500	804.0402	805.2625
127	811.2500	810.0405	811.2625
128	817.2500	816.0408	817.2625
129	823.2500	822.0411	823.2625
130	829.2500	828.0414	829.2625
131	835.2500	834.0417	835.2625
132	841.2500	840.0420	841.2625
133	847.2500	846.0423	847.2625
134	853.2500	852.0426	853.2625
135	859.2500	858.0429	859.2625
136	865.2500	864.0432	865.2625
137	871.2500	870.0435	871.2625
138	877.2500	876.0438	877.2625

139	883.2500	882.0441	883.2625
140	889.2500	888.0444	889.2625
141	895.2500	894.0447	895.2625
142	901.2500	900.0450	901.2625
143	907.2500	906.0453	907.2625
144	913.2500	912.0456	913.2625
145	919.2500	918.0459	919.2625
146	925.2500	924.0462	925.2625
147	931.2500	930.0465	931.2625
148	937.2500	936.0468	937.2625
149	943.2500	942.0471	943.2625
150	949.2500	948.0474	949.2625
151	955.2500	954.0477	955.2625
152	961.2500	960.0480	961.2625
153	967.2500	966.0483	967.2625
154	973.2500	972.0486	973.2625
155	979.2500	978.0489	979.2625
156	985.2500	984.0492	985.2625
157	991.2500	990.0495	991.2625
158	997.2500	996.0498	997.2625

the nonlinear distortions in both the HRC and IRC frequency plans are reduced compared with the STD plan.

2.4 Coaxial Cable TV Components and Systems

As we learned in Chapter 1, the basic architecture of HFC networks to deliver multichannel analog video/audio signals from the fiber node to the subscriber's home consists of coaxial cables, cascaded amplifiers, and taps. The transmission characteristics of these components such as transmission loss, frequency response, amplifier gain, and nonlinear distortions need to be considered when designing such a network. Furthermore, when RF digital channels are added, linear distortions such as group delay and amplitude variation within each 6-MHz channel also must be considered. The following section provides a brief overview of these properties.

2.4.1 Coaxial Cable

Network distribution coaxial cables typically consist of a copper-clad aluminum wire, which is the inner conductor, an insulating layer such as foam polyethylene, a solid aluminum shield, which serves as the outer conductor, and a PVC jacket. Subscriber drop cables are manufactured with a copper-clad steel center conductor and a combination of aluminum

braid and aluminum-polypropylene-aluminum (APA) tap shield. For specialty applications such as plenum installations, the coaxial cable jacket is often made with polytretrafluoro-ethylene (PTFE) materials. The transmission characteristic of coaxial cables depends mainly on the transmission frequency and on the diameter of the cable. The primary loss mechanisms in coaxial cables are the frequency and temperature dependence of the inner conductor and the dielectric outer conductor losses. In particular, the transmission loss of the inner conductor in coaxial cables at RF frequencies is influenced by the so-called *skin effect* [17]. When DC current flows through a conductor, the current is uniformly distributed throughout the cross-section of the conductor. As the RF frequency is increased, the current tends to crowd around the conductor surface, which reduces the effective current cross-section, resulting in a given conductor having higher impedance at higher RF frequencies.

There are three different types of coaxial cables that are used in the distribution system: trunk, feeder, and drop cables. The transmission loss of trunk cables, which have a typical diameter from 1/2" to 1", increases from 0.89 dB at 50 MHz to 3.97 dB at 750 MHz per 100 m for 1" cable. The feeder cable has typically a smaller diameter than the trunk cable, and is used to connect between the line-extender amplifiers to the tap. The drop cable typically has

Table 2.5 Maximum loss for drop cable (dB/100 ft at 68F) with four different cable diameters as a function of frequency. To obtain loss in dB/100 m, multiply by 3.281. After Ref. [16].

Frequency (MHz)	59 Series Foam	6 Series Foam	7 Series Foam	11 Series Foam
5	0.86	0.58	0.47	0.38
30	1.51	1.18	0.92	0.71
40	1.74	1.37	1.06	0.82
50	1.95	1.53	1.19	0.92
110	2.82	2.24	1.73	1.36
174	3.47	2.75	2.14	1.72
220	3.88	3.11	2.41	1.96
300	4.45	3.55	2.82	2.25
350	4.80	3.85	3.05	2.42
400	5.10	4.15	3.27	2.60
450	5.40	4.40	3.46	2.75
550	5.95	4.90	3.85	3.04
600	6.20	5.10	4.05	3.18
750	6.97	5.65	4.57	3.65
865	7.52	6.10	4.93	3.98
1000	8.12	6.55	5.32	4.35

a smaller diameter than the feeder cable, and is used between the tap and the subscriber home terminal. Table 2.5 shows the maximum drop cable loss (dB/100 ft.) at 68°F as a function of RF frequency for the following nominal cable diameters: 0.240" (59 series foam), 0.272" (6 series foam), 0.318" (7 series foam), and 0.395" (11 series foam). Notice the nearly 10 times increase in the cable loss from 5 MHz to 1 GHz for 59 series foam cable. The coaxial cable losses (in dB) are reasonably proportional to the square root of the frequency [17]. Cable plants are usually specified to operate over a wide temperature range from –40°C to +70°C. In general, the cable loss slowly increases linearly with temperature, since the cable attenuation increases with temperature.
A useful parameter to remember is the so-called cable loss ratio (CLR) given by

$$CLR = \sqrt{\frac{f_1}{f_2}} \tag{2.2}$$

where f_1 and f_2 are two different RF frequencies. For example, approximate the cable loss at 55 MHz when the cable loss at 450 MHz is 20 dB. The cable loss (CL) at 55 MHz is given by CL = $20 \cdot (55/450)^{1/2}$ = 6.99 dB.

2.4.2 RF Amplifiers

There are also three different types of cable TV RF amplifiers, depending on their location in the coaxial portion of the HFC network. Figure 2.6 shows the respective locations of trunk, bridger, and line-extender amplifiers in the traditional tree-and-branch architecture of the coaxial portion of the HFC network. Trunk amplifiers, which are typically spaced 20–22 dB from one another, are moderate-gain amplifiers with a typical output of 30 to 36 dBmV that are used to provide high CNR with low nonlinear distortions (< –80 dBc), particularly at the high-frequency cable TV channels (> 300 MHz). Feeder amplifiers are used not only for downstream delivery of analog and digital video channels, but also to split the transmitted signals to up to four feeder cables as shown in Figure 2.7. The output power of a bridger amplifier is typically in the range of 40–50 dBmV, which is about 12 dB higher than that of trunk amplifiers. However, higher nonlinear distortions are present at the output of bridger and line extender amplifiers. To reduce the effect of nonlinear distortions on the transmitted video signals and to maintain the flatness of the entire band, a maximum of two to four line- extender amplifiers are used, depending on the number of taps between the line extender amplifiers. Line-extender amplifiers, which are typically spaced between 120 m to 350 m, are used in the vicinity of the subscriber's home. For two-way cable TV systems, the downstream or forward video channels in the United States are placed between 52 MHz and 860 MHz, while the return-path or upstream band is between 5 MHz and

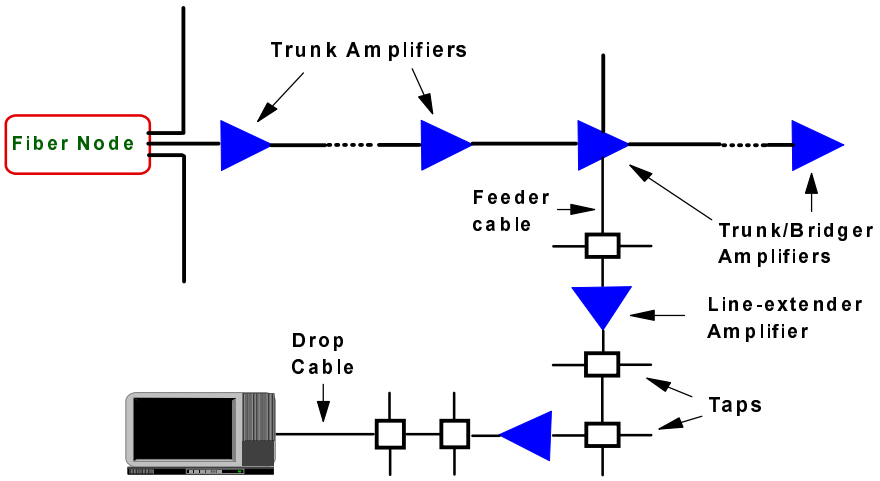

Figure 2.6 Tree-and-branch architecture of the coaxial portion of the HFC networks showing the different types of cables and amplifiers that are used.

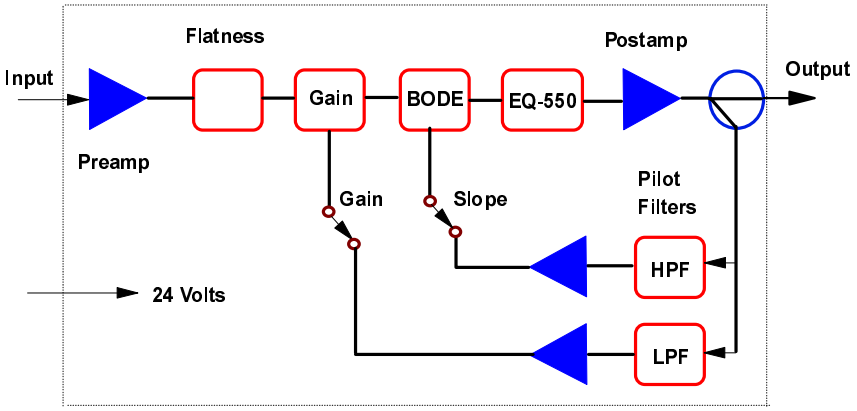

Figure 2.7 Simplified block diagram of trunk amplifier, showing the automatic gain and slope controls and equalizer up to 550 MHz.

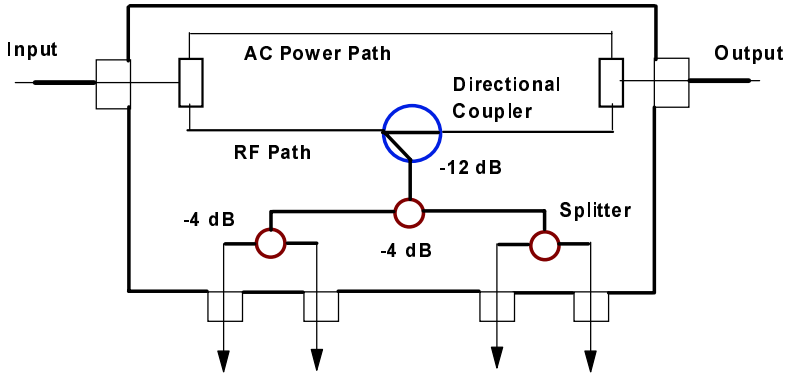

Figure 2.8 Simplified block diagram of four-way 20-dB tap.

42 MHz.[3] This partition is done using a special filter known as *diplex* filter, which has a typical isolation between these bands better than 60 dB. The diplexer filter is three-port device, with high, low, and common ports. The common-to-low port, which is marked as "L," is essentially a low-pass filter that allows the return-path signals to be transmitted. The common-to-high port, which is marked as "H," is essentially a high-pass filter that allows the forward channels to be transmitted. In a typical two-way trunk or bridger amplifier, the forward signals pass through the H ports, while the upstream signals are pass through the L ports.

A simplified block diagram of a trunk amplifier is shown in Figure 2.7. Since coaxial cables have a strong frequency-dependent loss (see Table 2.5 for example), the amplitude of the transmitted video channels must be equalized in order to maintain flatness across the transmitted RF spectrum. Forward equalizers are designed to compensate for fixed lengths of coaxial cables. By introducing additional attenuation at the lower frequencies, the equalizer allows the trunk amplifier to maintain a known slope across its transmission band. In addition, some trunk amplifiers are equipped with Bode equalizers to compensate for changes in the cable loss caused by temperature variations.

Trunk amplifiers typically use automatic gain control (AGC) and/or automatic slope control (ASC) circuitry. Typical gain and slope control ranges are 6 to 10 dB up to 750 MHz. The AGC and ASC modules in the trunk amplifier detects a sampled signal of standard pilot channels at the amplifier output, which is used to create the appropriate voltage to control the gain and/or slope of the amplifier. The standard pilot frequencies vary among the differ-

[3] Prior to 1994, the upstream band ended at 30 MHz. Other countries have different split frequencies such as Australia 65/85; Japan and New Zealand 55/70; India and Eastern Europe 30/48; Western Europe, Ireland, and United Kingdom 65/85.

ent manufacturers. All cable TV amplifiers use some variation of push-pull circuitry to minimize second-order distortions. Both Feedforward and power-doubling technology are used for improved distortion performance.

2.4.3 Taps

Figure 2.5 shows a simplified block diagram of a four-way 20-dB tap. Taps are used to split the transmitted signals to drop cables as shown in Figure 2.8. A typical tap consists of a RF directional coupler and power splitters. The directional coupler diverts a specific amount of the input signal power, while the power splitter splits that signal to typically two, four, or eight subscriber ports. The power loss between the input and the output ports is called is called *insertion loss*, while the power loss between different output ports is called *isolation loss*. Tap insertion loss is nominally independent on frequency or temperature. High isolation loss is essential for two-way cable systems in order to prevent the upstream signals from one customer to leak into the forward signals of another customer. Typical isolation in a tap is about 20 dB for both forward and return-path bands. Taps are marked by their tap value, which is the power ratio of the signal at the tap to the input signal. Common values are from 4 dB to 35 dB, in 3-dB steps. Taps are typically housed in a die-cast aluminum alloy housing for aerial or ground mounting with a weather seal gasket to prevent entry of moisture and dust.

2.5 Multichannel Coaxial Cable TV Systems

2.5.1 CNR of a Single and Cascaded Amplifiers

One of the most important parameters that characterize the transmission performance of a cable TV system is the carrier-to-noise ratio (CNR). The CNR at the output of a single RF amplifier is given by

$$CNR(dB) = P_{out} / k_B TB + 59.16 - F - G \tag{2.3}$$

where P_{out} is the output power from the amplifier, k_B is Boltzmann's constant (1.38×10^{-23} joule/K), T is the effective Kelvin temperature of the amplifier, B is the signal noise bandwidth (4-MHz), and F and G are the amplifier noise figure and gain in dB. The value –59.16 dBmV is the 75-ohm impedance room temperature thermal noise in 4-MHz bandwidth. Typical noise figures for trunk amplifiers range from 7 to 10 dB at an input signal level of +10 dBmV and gain of 20 dB.

Now, consider a cable TV system with a chain of N unlike cascaded amplifiers but with the noise bandwidth, where the N_{th} amplifier has a noise figure F_N and amplification G_N as

shown in Figure 2.9. Then, the overall system noise figure F (expressed as ordinary power ratio) is given by

$$F = F_1 + \frac{F_2 - 1}{G_1} + \frac{F_3 - 1}{G_1 G_2} + \ldots + \frac{F_N - 1}{G_1 G_2 \cdots G_{N-1}}$$

In the simple case of N identical RF amplifiers, Equation (2.4) is reduced to $N{\cdot}F$ where F is the noise figure of each amplifier. The overall noise figure in dB is given by

$$NF_N(dB) = 10 \cdot \log(N \cdot F) \tag{2.5}$$

Then, the overall system CNR is given by

$$CNR_N = CNR - 10 \cdot \log(N)$$
(2.6)

For example, if a cable TV system has four cascaded amplifiers with CNR of 56 dB for a single amplifier, then the overall CNR after the fourth amplifier is 50 dB.

The overall system CNR_N for a system of dislike amplifiers as described by Equation (2.4) is simply given by

$$CNR_N(dB) = -10 \cdot \log\left[10^{-CNR_1/10} + 10^{-CNR_2/10} + \ldots + 10^{-CNR_N/10}\right] \tag{2.7}$$

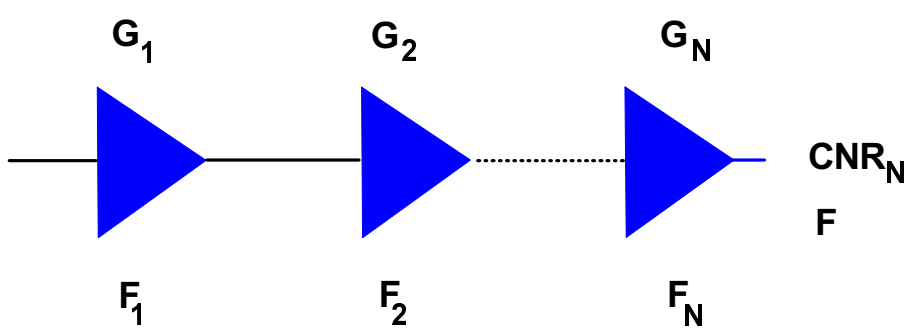

Figure 2.9 N cascaded amplifier configuration for calculating the overall system CNR and noise figure (F).

2.5.2 Nonlinear Distortions: CSO, CTB, and XMOD

When multiple band-limited signals such as AM-VSB modulated video signals are transmitted through a nonlinear component or system such as an RF amplifier or a laser transmitter, various nonlinear distortions (NLD) will be generated. The most important and strongest second-order intermodulation (IM_2) products are given by $A \pm B$, where A and B are two arbitrary RF frequencies, which are always 6-dB higher than the $2A$ or $2B$ distortion products. In a cable TV system, the summation of all possible different IM_2 products that are present in a particular channel is commonly called composite second-order (CSO) distortion. The CSO distortion beats in the standard cable TV frequency plan are 1.25 MHz and 0.75 MHz above and below the luminance carrier of a particular channel. The CSO distortion beats at ± 0.75 MHz is a result of channels 5 and 6, which are offset 2 MHz from the 6 MHz multiples, mixing with the other channels in the standard frequency plan.

In the IRC frequency plan, the CSO distortion beats are only located at ± 1.25 MHz above or below the luminance carrier of a particular channel. Due to the frequency offset of the CSO distortion from the luminance carrier, it appears as slowly moving diagonal stripes on a TV picture. In the HRC frequency plan, the CSO and CTB distortion beats are frequency-coincident with the visual carrier for coherent channel cable TV systems. As we will see later, this is one of the main advantages of the HRC frequency plan compared with the other frequency plans.

For a typical cable TV system with N dislike amplifiers, the overall CSO is given by

$$CSO_N = -15 \cdot \log_{10}\left[10^{-CSO_1/15} + 10^{-CSO_2/15} + \ldots + 10^{-CSO_N/15}\right] \tag{2.8}$$

The dominant third-order intermodulation (IM_3) products are $A+B-C$, $A-B+C$, and $A-B-C$ where $A < B < C$, and A, B, and C are three arbitrary RF frequencies. The weakest third-order intermodulation product is the 3A product, which is 15.56 dB weaker than the ABC distortion products. The $2A \pm B$ and $A \pm 2B$ products are 9.54 dB weaker than the ABC products. In a cable TV system, the summation of all possible different third-order intermodulation products that fall onto a particular channel is commonly called composite triple beat (CTB) distortion. Thus, the CTB distortion is deduced by measuring the two-tone IM_3 (i.e., $2A \pm B$), counting the number of IM_3 products that fall in a particular channel, and adding 6 dB.

For equally spaced luminance carriers, the estimated number of CTB beats in any channel is given by

$$N_{CTB} = \frac{(N-1)^2}{4} + \frac{(N-M)\cdot(M-1)}{2} - \frac{N}{2} \tag{2.9}$$

where N is the total number of channels and M is the number of channels being measured. For N>>1 and in the middle of the band, Equation (2.9) reduces to $3N^2/8$, while at the edge of the band, Equation (2.9) reduces to $N^2/4$. Notice that the number of CTB beats at the band edge is 2/3 of the number of CTB beats in the middle of the band, independent of the number of channels. The overall CTB distortion (in dB) is $10 \cdot \log (N_{CTB})$. In Equation (2.9), it is also assumed that the luminance carriers are not phase locked. If the carriers are phase locked, then the CTB beats add coherently, and the overall CTB is $20 \cdot \log (N_{CTB})$.

For a typical cable TV system with N different amplifiers, the overall CTB is given by

$$CTB_N(dB) = -20 \cdot \log\left[10^{-CTB_1/20} + 10^{-CTB_2/20} + \ldots + 10^{-CTB_N/20}\right] \tag{2.10}$$

Thus, a 1 dB change in the amplifier output will change the CTB distortion ratio by 2-dB (the beat product itself changes by 3 dB). For every double in the number of amplifiers with identical CTB distortion, the overall CTB ratio degrades by 6 dB.

Cross modulation (XMOD) distortion is another type of cable TV distortion. It occurs when a group of video carriers are modulating other video carriers in a multichannel video system. The origin of XMOD distortions is the similar to the CSO/CTB distortions. These distortions are usually generated when an RF coaxial amplifier or other active device is overloaded or driven beyond its compression point such that its gain becomes nonlinear. In older cable TV networks, XMOD distortions often produced picture interference that resembled a windshield wiper effect. However, in current cable TV networks with a large number of AM-VSB channels and high operating levels, the effect of XMOD distortions are typically masked by CSO/CTB distortions, and thus do not impose a serious problem to the cable TV operators.

The relative magnitude of the CSO, CTB, and XMOD distortions for a given channel is also an important consideration. Unfortunately, there is no simple answer. However, as we will learn in Chapters 3 and 4, the relative magnitude of the CSO, CTB, and XMOD distortions in a given fiber link depend primarily on the type of the laser transmitter used and the linearization techniques used to suppress these distortions.

2.5.3 Multipath Reflections (Echoes) and Group Delay

Multiple multipath reflections in the coaxial portion of the HFC network can severely degrade the propagating analog or digital signals before they reach the subscriber home. Multipath reflections occur when two or more propagation paths exist between the transmitter and receiving sites. The various reflections relative to the directly transmitted signal as measured at the receiver are called *echoes*, which are characterized by their amplitude attenuation and time delay. The echoes result from reflections off man-made or natural structures, repeaters, or the use of multiple transmitters.

The effect of multipath echoes on analog NTSC signals is quite different from that on digital signals. Let us first focus on the effect on the transmitted analog NTSC signals. For NTSC signal, a ghostlike image is horizontally displaced from the main image by an amount proportional to the time delay of the reflected signal. The effect of multipath reflections can be seen directly on an analog TV screen as ghosting, horizontally displaced from the main image. This can be used to provide an estimate of both the time delay and amplitude of the multipath echoes. The duration of each horizontal TV line is about 63.5 μs, with about 11 μs being used for the horizontal sync and blanking interval, providing about 52.5 μs for the actual video image. Because of TV set over-scan and simplicity, let us round off the video signal duration to 50 μs. Assuming a single dominant echo with a time delay less than 50 μs, its time delay can be estimated by multiplying the percentage of TV screen displaced by 50 μs. For example, if a ghost is displaced 25% from the main signal, the multipath delay is approximately 12.5 μs.

The amplitude of the multipath can also be determined by comparing the amplitude of the ghost to the amplitude of the original signal, using a video waveform monitor with the appropriate triggering to view only the VITS signals. The magnitude of the multipath echo can be determined as 20·log (% of amplitude/100). For example, if multipath reflection generates a ghost that is 25% the amplitude of the original waveform, then its amplitude is –12 dBc, or 12 dB below the desired signal. This method can be used effectively to measure the amplitude of the echoes for one or more of the transmitted analog channels.

Multiple echo degradation is not seen in the digitally demodulated picture until some "threshold" level of the digital signal is reached, resulting in a loss of the receiver synchronization. Uncorrected multipath echoes introduce intersymbol interference (ISI) that results in a closure of the eye pattern, making the signal more susceptible to decoding errors. Using an adaptive equalizer in the digital receiver can minimize the digital degradation effect caused by multiple echoes. However, strong multiple echoes can cause the digital receiver to lose synchronization. Outside the time range of the receiver's adaptive equalizer, the effect of multiple echoes is perceived as additional noise and causes degradation to the received SNR. The topic of how an adaptive equalizer in a digital receiver works to mitigate the effect of multiple echoes will be discussed in detail in Chapter 7.

If the time delay of the multipath echoes is beyond the range of the adaptive equalizer in the digital receiver, then the adaptive equalizer is not able to combat the generated ISI. In this case, an ordinary spectrum analyzer can be used to characterize multipath on digital signals. Figure 2.10 shows, for example, the simulated spectrum of a 64-QAM channel in a 6-MHz band. In the presence of Gaussian noise, the spectrum of the 64-QAM signal is essentially flat across most of the symbol rate bandwidth. If, however, multipath reflections are present, constructive and destructive interference of the reflected paths with the direct path will cause ripples in the otherwise flat spectrum. The time delay for a single multipath echo can be estimated by taking the inverse of the measured frequency spacing of the ripples on a spectrum analyzer. The ripple spacing is measured from peak-to-peak or from null-to-null.

It turns out that for a single echo, its magnitude (in dB) with respect to the transmitted signal can be estimated according to the following approximation:

$$EM(dB) = 20 \cdot \log\left[\frac{10^{\Delta_{pp}/20} - 1}{10^{\Delta_{pp}/20} + 1}\right] \tag{2.11}$$

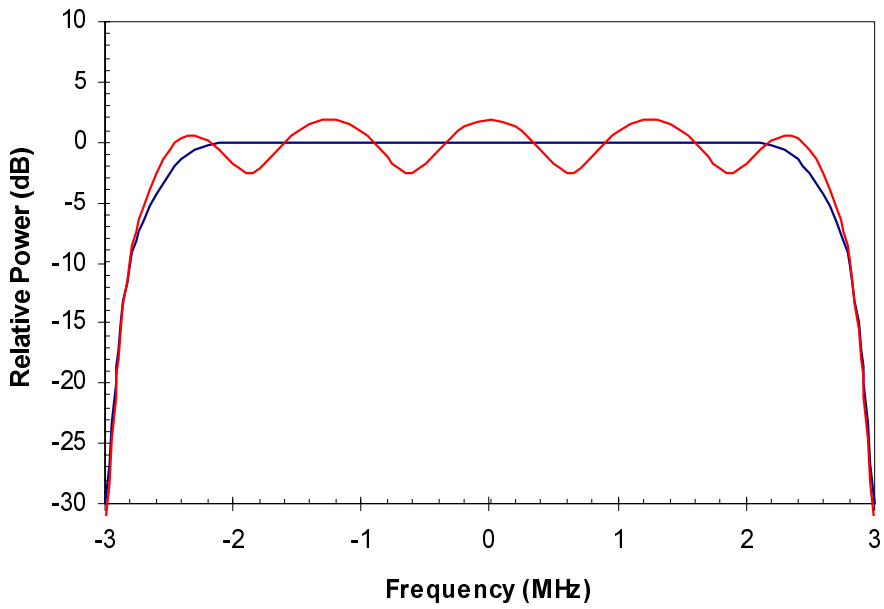

Figure 2.10 Simulated effect of a single echo with magnitude of –12 dBc and time delay of 0.8 μs relative to the main signal on the RF spectrum of a 64-QAM signal. After Ref. [9].

Table 2.6 The corresponding echo profile for Figure 2.10.

Echo #	Time Delay	Magnitude	Phase
1	0.2-μs	–11 dBc	180°
2	0.4-μs	–14 dBc	180°
3	0.8-μs	–17 dBc	180°
4	1.2-μs	–23 dBc	180°
5	2.5-μs	–32 dBc	180°

where Δ_{pp} is the measured signal peak-to-valley amplitude variation (in dB) on a spectrum analyzer. Figure 2.10 shows also, the simulated effect on the spectrum of a 64-QAM signal caused by a single multipath echo with a time delay of 0.8 μs and with a magnitude of 12 dB below the transmitted signal. Note that the frequency spacing between adjacent ripples is 1.25 MHz and the peak to valley amplitude variation of 4.5 dB.

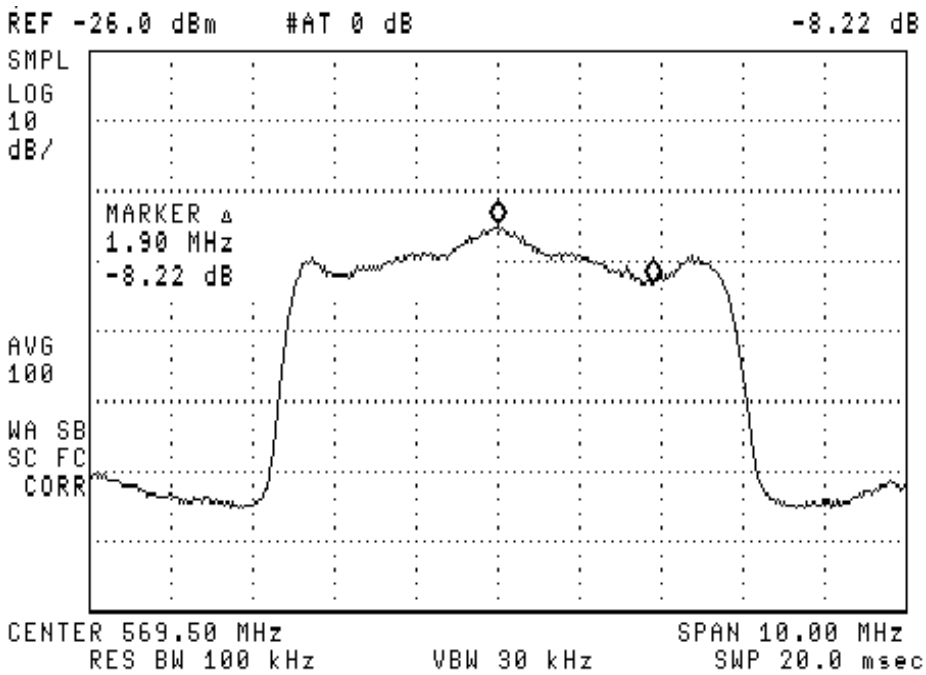

Figure 2.11 Measured 256-QAM spectrum at center frequency of 569.5 MHz in the presence of five-multipath echoes, according to Table 2.6.

When multiple multipath echoes degrade a QAM signal, the echo analysis using a spectrum analyzer becomes more difficult. This is because the ripple pattern is a complex superposition of the different echoes' time delay and magnitude, requiring a Fourier analysis. Figure 2.11 shows, for example, the measured spectrum of a 256-QAM signal at 569.5 MHz in the presence of five multipath echoes, where their time delay, amplitude, and phase are shown in Table 2.6. The QAM receiver in this measurement had an adaptive equalizer with 8 symbol-spaced feed-forward (FFE) taps and 24 symbol-spaced decision-feedback (DFE) taps. One of the FFE taps is used as the center tap, leaving 7 FFE taps for leading echoes and 24 DFE taps for lagging echoes. The total theoretical range of the adaptive equalizer is from −1.3 μs to +4.48 μs (symbol duration ≅ 186.5 ns). Notice the large 8.22-dB amplitude ripple (i.e., peak-to-valley variation) in the spectrum of the 256-QAM signal due to the pres-

ence of multiple echoes. In fact, the measured 256-QAM BER had increased from 10^{-8} to $1.3 \cdot 10^{-3}$ at a corrected CNR of 31.2 dB in the presence of these multipath echoes.

For multipath echoes with a short time delay (less than 0.2 μs), less than one ripple may be created in the 6-MHz spectrum. This means that multipath echoes with short-time delay, which are caused by relatively close reflections, have the effect of attenuating or amplifying entire channels, that is, it creates ripples across a wide frequency band spanning many adjacent channels. Consequently, it may actually be beneficial to those channels that are increased in level, but harmful to those channels that are attenuated.

Another important related parameter is the so-called *group delay*. The group delay is related to the frequency-dependent phase of various RF components in a cable TV plant such as diplex filters, equalizers, and impedance matching transformers. Mathematically, the complex multipath transfer function for a transmitted analog or digital channel can be described as

$$H(\omega) = |H(\omega)| \cdot \exp[i\phi(\omega)] \tag{2.12}$$

where $A(\omega) = -20 \cdot \log[\,|H(\omega)|\,]$ is the signal attenuation function (in dB), and $\phi(\omega)$ is the phase function of the propagating signal. The delay distortion or group delay is basically the instantaneous phase slope with respect to frequency, and it is given by

$$GD(\omega) = -\frac{d\phi(\omega)}{d\omega} = -\frac{1}{2\pi} \cdot \frac{d\phi}{df} \tag{2.13}$$

where f is the frequency in Hz. A critical parameter for robust transmission is the slope of the group delay across the transmission channel band. If the group delay is constant within the desired channel, there is no group-delay distortion. The term group-delay variation (GDV) is referred to simply as the maximum change (peak-to-valley) in the group delay across a given channel. For a cable TV system with N cascaded amplifiers, the total GDV across a given channel would be the sum of GDV from each amplifier in the link. In the small echo regime (for a single dominant echo), the maximum in-band GDV (in μs) can be approximated as

$$GDV(\mu s) = 2\tau \cdot 10^{-r/20} \tag{2.14}$$

where r is the echo magnitude (in dB) and τ is the echo delay (in μs) relative to the transmitted signal. Coaxial components such as amplifiers and taps typically generate GDV due to nonflat amplitude variations at different frequencies. For example, the GDV should be less than 0.2 μs per 1 MHz of channel bandwidth, which corresponds to an amplitude variation of 0.5 dB for a single echo with 0.1-μs time delay. The DOCSIS 1.1 specifications, for example, assume that the GDV of a typical cable TV network is 75 ns for a 6-MHz down-

stream channel, and 200 ns/MHz for an upstream channel. Even without the presence of multipath echoes, the use of various filters in the coaxial amplifiers typically generates GDV because of their nonflat frequency response.

There are various discrete multipath reflection models such as IEEE802.14 [8] and DOCSIS 1.0 [9] for both forward and return-path channels in a cable TV plant, which have been recently discussed. While the DOCSIS 1.0 model assumes a single dominant echo, the IEEE802 model breaks the echo power into multiple echoes within the time-delay range. Table 2.7 summarizes the maximum echo power and time-delay bounds for both downstream and upstream channels according to the DOCSIS model, assuming a single dominant echo.

Table 2.7 Multipath echo model according to DOCSIS 1.0 standard.

Echo Time Delay	Echo Magnitude (downstream)	Echo Magnitude (upstream)
0 to 0.5 μs	–10 dBc	–10 dBc
≤ 1.0 μs	–15 dBc	–20 dBc
≤ 1.5 μs	–20 dBc	–30 dBc
> 1.5 μs	–30 dBc	–30 dBc

Note that placing the echo power at the maximum of the delay range produces the largest GDV, but not necessarily the worst effect of the transmitted signal. Breaking the echo power into multiple echoes within the time-delay range lowers the GDV, but actually has a worse effect on the transmitted signal due to higher peak-to-rms ratio for combining multiple echoes compared with a single echo.

2.5.4 AM Hum Modulation

As we learned in Section 2.1, the vertical scan frequency of a TV image was originally selected to match the AC power frequency (60 Hz). Modulation distortion at 60 Hz or harmonics of the fundamental powerline frequency, which is called "hum," is the amplitude distortion of the transmitted signals caused by the modulation of the signal by the power source. The AM hum modulation is defined as the percentage of the peak-to-peak interference compared with the rms value of the sync peak level of the visual RF signal [2]. According to FCC regulations, Part 76, Section 76.605, the magnitude of AM hum modulation at the subscriber's terminal is required not to exceed 3% peak-to-peak of the visual signal level [4]. The major sources of power line hum (60 Hz and 120 Hz) are amplifiers with defective power supplies and overloaded system power supplies. However, other cable system components, even passive devices, can introduce hum modulation distortion under certain conditions. For additional discussion of AM hum modulation, please see Section 8.10.7.

2.6 Cable TV Return-Path Transmission Characteristics

The standard frequency plan for upstream transmission is shown in Table 2.4. The "T-channel" plan originated in about 1960 to identify the video channels that could be converted in a block to the FCC standard channel assignment T7 to T13. The current return-path or upstream transmission band is from 5 MHz to 42 MHz in the United States (5 to 65 MHz in Europe). Recently, it has been proposed by the same cable operators that the return-path band be located above the downstream channels in the 900-MHz to 1-GHz band. Although this upstream band is almost three times as large as the 5 to 42-MHz band, coaxial cable losses are almost ten times larger than at the 5–42 MHz band and exhibit strong frequency dependence. (See Table 2.5.) On the other hand, the upstream noise in these RF frequencies is significantly less than in the 5–42-MHz band. To date, cable TV operators, because of the cost to upgrade their network to 1 GHz, have mostly ignored this proposal.

2.6.1 Return-Path Noise Sources

The noise sources that impair the transmitted upstream signals in cable TV systems include ingress noise, common-path distortion, laser transmitter, and optical receiver noise. Ingress noise is the most important and dominant noise source in the return-path portion of the HFC network, and can be divided into three general types:

- Narrowband shortwave signals, primarily from radio and radar stations, that are transmitted terrestrially and coupled to the return-path band at the subscriber's home or in the cable TV distribution plant.
- Burst noise, which is generated by various manmade and naturally occurring sources, has time duration longer than the $(\text{symbol rate})^{-1}$.
- Impulse noise, which is similar to burst noise, but has time duration shorter than $(\text{symbol rate})^{-1}$ such that the receiver impulse response is effectively being measured.

The propagation of narrowband interference signals depends on the atmospheric conditions as well as the 10.7-year solar cycle. Increased solar sunspot activity has been correlated with increases in the maximum useable frequency because of ionization in the upper layers of the atmosphere. There are various methods for reducing ingress in the return-path band at the subscriber's location, which will be discussed later. Burst and impulse noise are generated from various manmade sources such as electric motors and power-switching devices. Although these sources produce burst/impulse noise events in the 60-Hz to 2-MHz portion of the spectrum, their harmonics show up in the 5–42-MHz upstream frequency band. Naturally occurring burst/impulse noise events include lightning, atmospherics, and electrostatic discharge, which typically extend from 2 kHz up to 100 MHz. Figure 2.12 shows a typical return-path spectrum as measured at a cable headend with the average signal level in dBmV. Notice the presence of various ingress peaks, particularly below 10 MHz.

As we will see later, for robust data transmission using quadrature-phase-shift-keying (QPSK) modulation, a 16–20 dB margin above the noise level is needed, as indicated by the horizontal solid line in Figure 2.12.

The time-varying ingress noise level also depends on the number of subscribers connected to the cable TV headend. Figure 2.13 shows the average ingress noise level as a function of the number of subscribers for T7, T8, T9, and T10 upstream channel frequencies (see Table 2.4), which is based on CableLabs field measurements [7]. The worst-case ingress levels can exceed +10-dBmV within a 100-kHz bandwidth. Two distinct trends emerge from Figure 2.13. First, the ingress noise levels are generally higher in the low-frequency region of the upstream band. Second, ingress noise levels increase for cable TV distribution plants with larger number of subscribers per fiber node. The solid curves in Figure 2.13 can be approximated by $A \cdot \log(N) - B$, where N is the number of subscribers, $A = 9$, and $B = 28$, 33, 37, and 40 for T7 (top curve), T8, T9, and T10 channels, respectively.

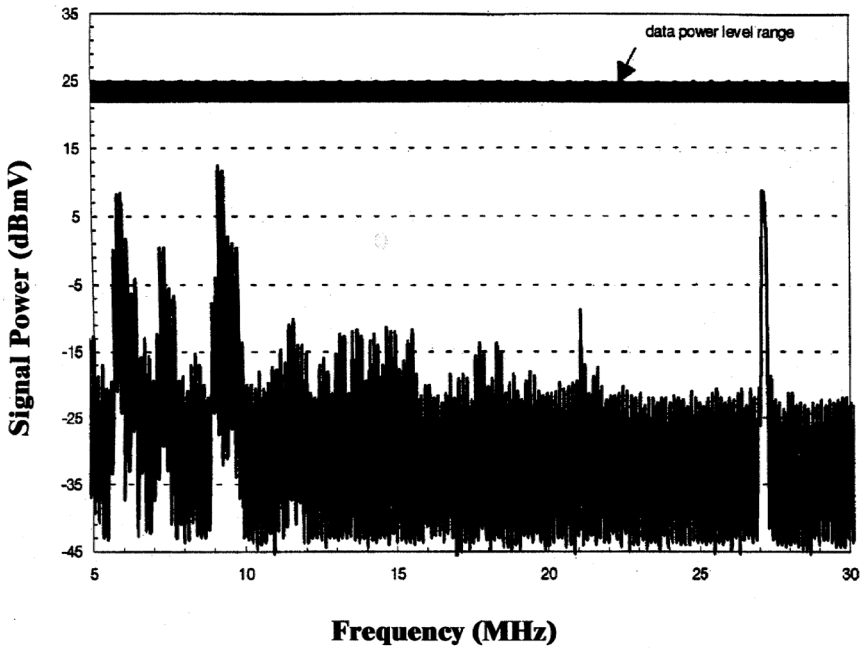

Figure 2.12 Typical return-path spectrum (5-30-MHz) as measured at the cable TV headend, with averaged signal levels (in dBmV). Notice the pronounced ingress peaks, particularly below 10 MHz. After Ref. [22] (© 1995 IEEE).

Another important noise source is common-path distortion, originating from various nonlinearities in the cable TV plant such as oxidized connectors and bad amplifiers. The common-path distortion appears as discrete noise peaks in the return-path spectrum spaced by 6 MHz (8 MHz in PAL systems). This distortion can be contained in properly maintained cable TV plants. Other types of noise sources are the upstream laser transmitter noise and optical receiver noise, which will be discussed in detail later.

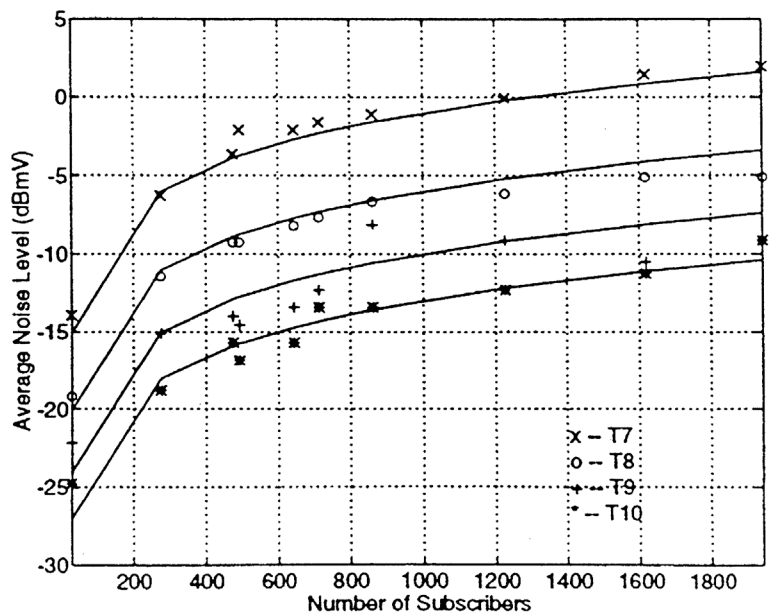

Figure 2.13 Average ingress level (in dBmV) as a function of the number of subscribers for T7, T8, T9, and T10 upstream channel frequencies. After Ref. [24].

The observed increase in the ingress noise levels as the number of homes passed is increased is due to the so-called *noise funneling* effect. This effect is based on the assumption that the unwanted noise signals are located at the subscriber's location with time-dependent amplitude. Since the unwanted signals are uncorrelated, for example, Gaussian noise, the signals sum noncoherently. If the signals from each home passed were equal, then the noise-funneling factor would be $10 \cdot \log_{10}(N)$, where N is the number of homes passed. It turns out that according to the empirically derived expression based on Figure 2.13, the noise-funneling factor is slightly smaller than one obtains from a noncoherent noise power sum.

The time-varying narrowband interferers in the return-path cable systems limits channel availability for high-speed data transmission application. To quantify this parameter, automated spectral measurements of upstream ingress noise were taken every one to five minutes over an extended period of time (48 to 72 hours). The channel availability is the percentage of the time in which a channel of a specified bandwidth is available for transmission for a given modulation format such as QPSK or 16-QAM. For example, to transmit 256-kb/s, using QPSK modulation with FEC over a 192-kHz channel bandwidth, the required carrier-to-noise-plus-interference C/(N+I) must be at least 15.8 dB at BER of 10^{-7}. Thus, if the C/N or CNR (in the presence of Gaussian noise only) is maintained at 21 dB, a single narrowband interferer as high as 10 dB below the equivalent unmodulated carrier (corresponding to C/I = 10 dB) can be tolerated.

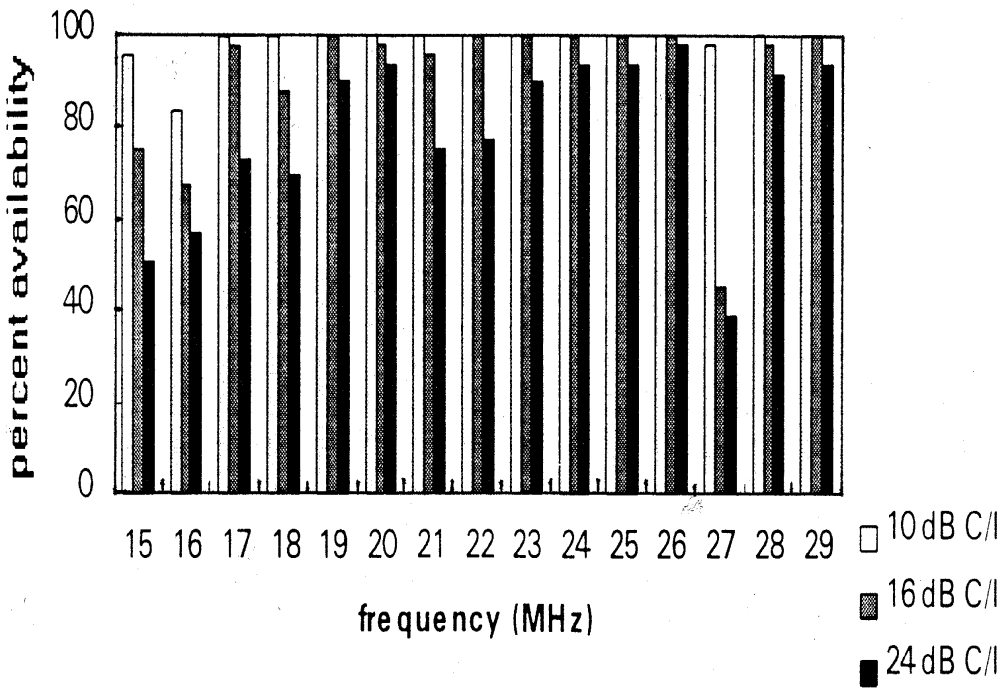

Figure 2.14 Percentage of 1-MHz channel availability in the 15 to 30-MHz frequency range for a 1500 home node. After Ref. [22] (© 1995 IEEE).

In general, the upstream channel availability depends primarily on the number of homes connected to the fiber node, the channel bandwidth, and selected upstream frequency. Based

on Figure 2.10, it is clear that by decreasing the number of homes passed in the fiber node the noise funneling effect is reduced. Also, selecting an upstream frequency above, say 15 MHz, is likely to improve the upstream channel availability based on Figure 2.12. Choosing a relatively wide upstream channel band, say 1 MHz or more, is also likely to reduce the channel availability. Figure 2.14 demonstrates, for example, the availability of the 1 MHz channel in the 15- to 30-MHz frequency range of the upstream spectrum for a single fiber node with 1500 homes passed [22]. Notice the reduction in channel availability as the C/I is increased from 10 dB to 24 dB.

2.6.2 Return-Path Noise Filtering

The appearance of ingress noise and other narrowband interference on the return-path cable network has introduced a new challenge for cable TV operators. Many companies have been working on developing methods to combat the effect of the ingress noise from reaching the cable TV headend. These methods include active or passive filtering techniques anywhere along the return-path channel from the subscriber to the fiber node.

One method, for example, consists of using a blocking filter, nominally between 15 to 40 MHz, between an in-home splitter and a coaxial termination unit (CTU) at the side of the home. The signals from the subscriber home terminals such as CM and STB can be transmitted from inside the home, but a low-pass filter prevents any signals originating from the home in the 15 to 42-MHz frequency band to enter the return-path cable network. Upstream-transmitted signals in the 15 to 42-MHz band can be added in the CTU after the blocking filter. Although this method reduces the amount of ingress noise coming from each home, it still allows the relatively high ingress spectral region of the return-path (5 to 15 MHz) to enter the cable network, and the method may be costly to implement. Another proposed method is to use a low-pass filter at the side of the house such that the filter is off except when the subscriber is transmitting data upstream.

Another method is using a bandpass filter with a switch at the side of the subscriber home. The upstream ingress noise from the subscriber home is filtered when the subscriber is not transmitting data. The disadvantage of this method is the large time delays from the switches when there are many subscribers connected to a fiber node ($\approx$1200) who are trying to transmit data upstream.

In addition to the use of filters and similar approaches, upstream ingress and other impairments can largely be controlled by the use of quality materials, proper subscriber drop installation practices, good network maintenance programs, and aggressive signal leakage monitoring and repair [26]. This latter item has the benefit of reduced ingress where a leak exists and outside signals can also enter the network. To make all of these efforts successful requires effective training and quality control programs.

References

1. G. H. Hutson, P. J. Shepherd, and W. S. J. Brice, *Color Television System Principles, Engineering Practice and Applied Technology*, McGraw-Hill, Europe (1990).
2. *NCTA Recommended Practices for Measurements on Cable Television Systems*, 2nd Ed., National Cable Television Association, Washington, D.C. (1993).
3. John D. Lenk, *Lenk's Video Handbook: Operation and Troubleshooting*, McGraw-Hill (1991).
4. *Code of Federal Regulations, Title 47, Telecommunications, Part 76, Section 76.605*, *Cable Television Service*. Federal Communications Commission Rules and Regulations, Washington, D.C. (1991).
5. *National Association of Broadcasters Engineering Handbook*, 7th Ed., Washington, D.C. (1985).
6. L. Chariglione, "MPEG: A Technological Basis for Multimedia Applications," *IEEE Multimedia* **2**, 85–89 (1995).
7. *MPEG Video Compression Standard*, Edited by J. L. Mitchell, W. B. Pennebaker, C. E. Fogg, and D. J. LeGall, Chapman and Hill, N.Y. (1997).
8. B. G. Haskell, A. Puri, and A. N. Netravili, *Digital Video: An Introduction to MPEG-2*, Chapman & Hall, New York (1996).
9. See http://www.mpeg.org/ Web site for many technical information and news on the different MPEG standards.
10. L.Chiariglione, "MPEG and Multimedia Communications," *IEEE Transaction on CSVT* **7**, 1, (Feb. 1997).
11. U.S. Advanced Television Systems Committee*, Digital Audio Compression (AC-3),* draft ATSC standard (1994).
12. S. Vernon, "Design and Implementation of AC-3 Coders," *IEEE Transaction on Consumer Electronics* **41**, no.3 (1995).
13. ITU-T Recommendation H.261: Video Codec for Audiovisual Services at px64 kbits (1993).
14. ITU-T Recommendation H.263: Video Coding for Low Bit-rate Communication (1995).
15. See http://drogo.cselt.stet.it/mpeg/, which is the official MPEG committee Web site, for information on MPEG-4 and MPEG-7 standards.
16. Electronic Industries Association, "Cable Television Channel Identification Plan," EIA IS-132, May (1994).
17. A. S. Taylor, "Characterization of Cable TV Networks as the Transmission Media for Data," *IEEE Journal on Selected Areas in Communications* **SAC-3**, 255–265 (1985).

18. S. Ovadia and Q. Zhang, "Robust Adaptive Equalization in DVB 64/256-QAM Receiver for CATV Applications," *ICSPAT Proceedings*, **1**, 332–336 (1998).

19. M. Kolber and M. Ryba, "Measuring Multipath in Wireless Cable Environment," *RF Design Magazine* **2**, 52–74 (1999).

20. T. J. Kolze, "Proposed HFC Channel Model," General Instrument IEEE802.14 contribution, IEEE802.14-96/196; Enschede, Netherlands (1996).

21. CableLabs, "Data-Over-Cable Service Interface Specifications (DOCSIS): Radio Frequency Interface Specification," version 1.0 (1997).

22. C. A. Eldering, N. Himayat, and F. C. Gardner, "CATV Return Path Characterization for Reliable Communications," *IEEE Communications Magazine* **8**, 62–69 (1995).

23. CableLabs, "Two Way Cable Television System Characterization," (1995).

24. M. D. Carangi, W. Y. Chen, K. Kerpez, and C. F. Valenti, "Coaxial Cable Distribution Plant Performance Simulation," *SPIE* vol. 2609, 215–226 (1995).

25. F. Edgington, "Preparing for in-service Video Measurements," *Communications Engineering and Design* **6**, 94–100 (1994).

26. R. Hranac, "Mystified by Return Path Activation? Get Your Upstream Fiber Links Aligned," *Communications Technology Magazine*, May (2000).